FAIRLAWN CONTROLS

BMS SPECIFICATION –

March 2022

Fairlawn Control

Automatic Controls, Technical Specification

Revision	Issued For	Date	Author	Checked By

Confidentiality and Third Party Responsibility

This document is confidential to the party to whom it is addressed and their professional advisers for the specific purpose to which it refers. No responsibility is inferred to any third parties, and neither the whole, nor any part, nor reference thereto may be published or disclosed.

No responsibility is accepted for the advice of the Client's independent consultants which may be reflected in our own reports.

Revision Table

Rev	Date	Section	Amendment(s)

Contents

1 Automatic Controls and Building Management Systems

This document shall be read in conjunction with all other sections of the Contract preliminaries, Technical specifications, Architectural, structural and services drawings.

This section describes the Automatic Control System-Building Management System and is equally applicable to any automatic control system provided either as the BMS, stand-alone controllers, package controllers or the energy management system.

The Contractor shall be responsible for the automatic controls and BMS systems associated with the project. They shall employ an automatic control specialist for this section of the works.

The project will be constructed within an existing building that will have additional floors added to the top. Generally the services will be installed to provide Cat A provision for the office floors with a shell and core for the retail areas.

There will be a number of separate control system provided by specialist suppliers. However all control systems shall follow the principles of the specification with regard to standard materials and workmanship. Wherever packaged control systems are provided the package controller shall work in conjunction with the sitewide BMS specialist to provide full integration and shall provide full on-site attendance throughout testing and commissioning of all control systems.

This portion of the work is a Contractors design proposal, information provided in this document is the minimum level required for materials, workmanship and plant operation.

1.1 Extent of Work

The contractor shall design, supply and install set to work, test, commission and handover the completed automatic controls systems for the entire project. This shall include but is not limited to: the functional design specifications, control panel design, plant description of operation, design and selection of controls instruments and actuators, heat meters, main plant controllers, fan coil unit controllers, VAV controllers, user interfaces, software, firmware and hardware, control and starter panels, all power and controls wiring along with carrier systems, setting to work commissioning and handover.

The converged network shall be provided by a specialist generally running BACnet/IP with managed switches and spanning tree protocols. The network shall terminate within or alongside the control panel enclosures with sufficient RJ 45 socket's. The control specialists shall provide and install all networks downstream of the master controllers such as BACnet/MSTP for the fan coil units and the VAV terminal units, Modbus for the electrical metering, M-bus for water metering and BACnet/MSTP for heat meters.

The scope shall incorporate a smart building services ready solution which shall generally be a separate JACE 8000 fully licensed with 10,000 points for BACnet/IP and MQTT communication to a future smart system. To accommodate this the control specialist shall develop a naming convention based on Project Haystack.

The scope shall include the implementation of the energy monitoring system that should include automatic monitoring and metering targets and the development and implementation of dynamic dashboards. The EMS network is an integral part of the BMS although separate EMS network shall be provided that terminate at BMS control panels. It should be noted that external energy management system shall be provided as part of the package works by the BMS specialist.

The scope shall incorporate exporting energy metering data via a web service and/or .csv file to a third party billing provider.

The scope shall include the BMS server hardware and software fully configured with dynamic graphics and management interfaces. The system shall allow web access from any web browser either connected directly to the network or via Wi-Fi connectivity.

All main plant controllers shall be based on a Tridium web enabled server/ controller with embedded graphics and local Wi-Fi access. The submodules may be from any BMS specialist provided supplier.

The scope shall incorporate system test plans, stand-alone and integrated system testing, system handover packages and demonstration of the works to the client and the client representatives.

The scope shall include functional design specifications, description of operations, plant and equipment schedules, cabling schedules, control panel wiring diagrams, plant interface schedules, topography, plant and equipment location drawings, cable route drawings and operating and maintenance manuals.

The automatic control enclosures shall house the: controls transformers, all electric interlocking and recycling relays, indicator lights, electronic control equipment, direct digital control outstations, control low voltage transformers, terminal block and power and control MCBs and isolators.

It should be noted that the supplier of power boards and any subsequent power wiring shall be the responsibility of the contractor who shall size all LV components such as protection devices, cable systems, cable sizes and carrier routes.

It is the automatic controls specialists responsibility to size and select every item required for the project. The information provided in this document is for tender purposes only.

1.2 Document Note

For the easy read of this specification the scope and remit of the specialist automatic controls suppliers is described. However the contractor shall be responsible for the entire works and within reason the remit of various specialists is interchangeable.

The completed works shall be in line with the project specifications with regards to operation, standards of materials and workmanship, irrespective of who supplies the works.

As an example this document assumes that the power boards for the plant and equipment are provided by the BMS specialist however, these can be by the electrical contractor or perhaps the specialist plant provider.

Where the Contractor elects to provide controls equipment other than through the BMS specialist and in particular this probably relates to control valves, heat meters, energy meters, motor drive speed controllers, inverters, then this equipment shall be selected in conjunction with the BMS specialist. The BMS specialist shall provide full attendance whenever these 3rd party control devices are set to work and commission. Similarly, the specialist suppliers shall provide full attendance when integration of the equipment with the BMS is required.

All controls contractors shall comply with the requirements of the specification with regard to workmanship materials and standards. Whenever the term BMS is used this shall be equal applicable to every specialist automatic controls supplier.

All control systems are a contractors design portion of the project with the minimum standards set in the project specification.

1.3 Smart Building Integration

The client has a desire to provide a smart building environment for both the occupier and the FM team. Generally the occupier experience such as desk booking, find a room, printer management, cycle rack booking will be carried out by separate specialist and described in the smart building section of the specification. The BMS will provide all normal controls, user interfaces, BMS head end supervisor however specific items shall be made available to the smart system via a BACnet or MQTT.

To facilitate Smart Building Integration it is necessary that a naming convention is agreed in the first instance this shall be project Haystack as incorporated within the Niagara platform.
The BMS specialist shall provide conventional control devices for the plant but in addition shall install VOC and PM 2.5 air quality monitoring sensors in each tenants demise.

1.4 BMS System

The BMS shall be an open protocol BACnet solution conforming to ASHRAE 's BACnet/IP protocol standard CEN 16484-5 and based around a Tridium Niagara framework.

All controllers apart from terminal devices shall be web enabled and communicate BACnet/IP to the converged network and BACnet/MSTP to the terminal devices.

All controllers shall be freely programmable and fully licensed without any restrictions.

The controllers shall include all necessary gateways which this project will be Modbus, KNX, M-bus.

The head end shall be Tridium N4.

The BMS specialist shall provide BACnet/MSTP networks and all Modbus, M-bus networks downstream of the main plant controllers. The converged network between the main plant controllers shall be provided by specialist supplier.

2 Project Services Outline

The project although all within one building environment the MEP services are constructed in two separate configurations with one serving the lower floors and one set of services provided for upper levels 5, 6, 7 and 8.

Generally office floors levels 2 to 7 are constructed to a Cat A installation and allow for a number of tenants on each floor. The floors are air-conditioned by 4 pipe fan coil units with fresh air provided via VAV terminal units. The retail spaces at the ground, first and 8th floor levels are provided with shell and core services up to the landlords heating/cooling plate heat exchangers, the retail side pump sets will be provided at a future date by the retail fit out specialist.

The office floors are provided with heating and cooling heat exchangers served from the primary side heating and cooling system by variable volume pump sets. The tertiary duty standby pump sets on the tenant side of the plate heat exchangers are controlled in a variable volume manner to the demands of the served fan coil units.

These office floors are provided with ventilation via VAV terminal units from fresh air handling plants mounted on the roof for the upper floors and on the office floors at levels 2, 3, 4.

Heating to the lower floors is provided from gas-fired boilers in the basement with LTHW circulated by primary and secondary basement located, variable volume pumping systems.

Cooling to all floors is provided from roof top air cooled chillers supported by a 4 pipe air source heat pump. The variable volume cooling water is circulated by the primary pumps located on the roof and the secondary distribution systems in the basement.

Heating to the upper floors is provided from the air source heat pump and circulated by variable volume secondary circuit with constant volume primary circuit. Backup is provided from the gas fired boilers via a dedicated duty/duty/standby pump set with isolation valves on the distribution system.

The office floor AHUs both those mounted on the roof and on the office floors provide conditioned air at variable temperature and variable volume to the appropriate tenant during the occupancy period. The variable volume is determined by CO2 sensors mounted in the return air ducts that modulate the VAV unit to maintain the required set point.

The basement back of house landlord areas are provided with constant volume variable temperature ventilation systems. The boiler house is ventilated by a duty standby fans running for combustion and ventilation.

Smoke extract is provided from the basement by a duty standby fans.

The firefighting staircase lobbies are provided with rooftop mounted variable volume fans.

The public health services generally located in the basement distribute wholesome water to the end users from storage tanks and booster sets.

Rainwater attenuation tanks and discharge pump sets are provided in level B2.

Domestic hot water for B2 to level 5 is generated from the LTHW system with 3 storage calorifiers. The HWS is distributed via the CW booster set pressure with HWS circulation pumps to overcome heat loses.

Domestic Hot Water for levels 6 to 8 is provided by a water source heat pump located in the basement and serving 2 calorifiers. The HWS is distributed via the CW booster set pressure with HWS circulation pumps to overcome heat loses.

2.1 Automatic Controls Overview

The project encompasses the supply and setting to work all automatic control systems associated with the client's MEP services.

The BMS controls and manages the office air handling plants that provide fresh air via variable air volume terminal devices complete with DDC controllers to the individual tenant areas. The VAVs units are connected BACnet/MSTP to the sitewide BMS, for volume flow rate reset based upon measured CO2 levels.

The office floors are provided with fan coil units controlled by the sitewide BMS DDC controllers that are networked on a tenant by tenant basis to a floor master controller.

The floor master controller that includes the tenant optimiser also manages the landlord/tenant hydraulic interface comprising pump sets, plate heat exchanger and primary side control valves. The floor master controller is connected via BACnet/MSTP to the fan coil units and BACnet/IP to the sitewide BMS system. The floor master controller retains the software to call the fan coil units and ventilation plant in to operation. In addition the floor master controller manages the water flush routine and valve exercises for the fan coil unit.

The retail heat exchangers are controlled by the sitewide BMS, but these are not provided with secondary pumping circuits.

The roof top chillers and associated air source heat pump provide cooling via primary secondary circuit pumping systems to the air handling plants and the office tenant and retail plate heat exchangers. The chillers (ASHP) are enabled in sequence by the sitewide BMS to suit the heating/cooling demands.

The building construction is such that the existing areas are provided with heating from gas-fired boilers in the basement whilst the upper floors are provided with heat from the rooftop air source heat pump.

The lower floor heating is distributed by primary and secondary pumping variable volume circuits located in the basement. Similarly the upper floors are provided with primary and secondary variable volume pump sets located in the basement. Heat energy is provided by the roof top ASHP with back up from the boiler system. These systems are controlled and managed by the site wide BMS.

Ventilation plant is provided for the offices from the rooftop air handling plants for the new build areas and from on floor air handling plants for the existing spaces. These are all variable volume controlled and managed by the sitewide BMS.

Ventilation plant is provided for the retail spaces of the lower floors, the future dining, kitchen ventilation plants required by the tenant shall be provided with control systems by the tenant and are not part of these works.

Basement ventilation is provided for the back of house areas along with combustion air plant for the boiler house and smoke control systems in the basement. The systems are controlled and managed by the sitewide BMS.

Firefighting lobby/staircase smoke control systems are provided by specialist supplier and monitor the status by the sitewide BMS.

The public health services that include potable water tanks and booster sets is provided in level B2 with package controls that are monitored by the sitewide BMS.

The rainwater attenuation tanks, discharge pumps and overflow valves are controlled and managed by the sitewide BMS.

Domestic mains cold water to the building is provided with major water leak detection system and meters and distribution services are provided with water meters. These meters are monitored by the sitewide BMS and form part of the tenant billing system and where appropriate excess use alarms.

The electrical system is provided with switchboards in the basement and distribution boards for the tenants and the landlord services throughout the building. The switchboards and distribution boards are provided with electrical meters that are connected to the EMS and form part of the energy metering and tenant billing system.

The electrical distribution system including the generators and the automatic transfer switches will be monitored by the sitewide BMS through high level interfaces.

The domestic hot water for the levels 6 to 8 is generated via water source heat pump with storage in two calorifiers, back up to the system is provided from the central plant gas fired water system by a set of variable speed circulation pumps. The domestic hot water is circulated to overcome heat losses and provided with heat maintenance tape as appropriate. The system is controlled and managed by the sitewide BMS. The calorifiers are provided with immersion heaters powered, controlled and managed by the sitewide BMS.

The domestic hot water to the levels B2 to 5 is provided by calorifiers served by LTHW from the gas fired boilers. The domestic hot water is circulated to overcome heat losses provided with heat maintenance tape as appropriate. The system is controlled and managed by the sitewide BMS. The calorifiers are provided with immersion heaters powered, controlled and managed by the sitewide BMS.

The cooling to the switch rooms is provided through DX fan coil units with externally mounted air cooled condensers. The systems are networked together with a high level interface to the sitewide BMS. The fan coil and the condensers are controlled and managed by the specialist suppliers control system.

The cooling to back of house spaces in the basement is provided by fan coil units controlled and managed by the sitewide BMS.

The sundry systems such as the water treatment systems, air curtains, accessible toilet and refuge alarms are provided with integral control systems that are monitored by the sitewide BMS.

The converged network provided by a specialist supplier shall support BACnet/IP and terminate at the BMS panels with a suitable number of RJ 45 connections. All downstream networks from BMS controllers such as BACnet/MSTP, Modbus RTU, M-bus shall be provided by the BMS specialist. To provide early connectivity between BMS master controllers and any control panel components requiring IT connectivity the BMS specialist shall provide layer 2 managed switches in the control panels for interconnection of local devices such as controllers and displays. These switches shall be removed prior to the converged network managing the BMS system.

The heat exchangers, air handling plants and domestic hot water systems shall be provided with MID approved heat meters these shall be monitored by the sitewide BMS and form part of the energy management and tenant billing system. Similarly the tenant electrical distribution boards and the landlord switchboards/distribution boards are provided with MID approved electrical meters that shall be monitored by the sitewide BMS and form part of the energy management and tenant billing system.

The tenant billing system shall automatically generate energy and electrical bills along with water meter readings to form a combined tenant bill for services provided by the landlords central plant. The central plant energy use should be monitored by the sitewide BMS and form part of the proportion of these bills.

The BMS controllers shall be web servers with embedded graphics such that the whole system can be managed without a BMS head end supervisor. However, a BMS rack mounted server shall be provided based on Tridium solution.

The BMS server shall be provided running the head end application with a web browser for general access to the BMS data.

Separately a smart building integrator shall provide smart building environment for both the occupier and the FM team. The tenant BMS shall be configured for integration to the smart building system using a separate portal (JACE 8000 with 10,000 licensed points) and where necessary MQTT communication.
The BMS head end supervisor shall manage all alarms in the normal manner however, specific alarms and specific information such as energy use should be made available to the smart system.

The mechanical services plant and equipment is powered from BMS provided power boards generally form 2B type 2 with form 1 control panels.

2.2 Scope

2.2.1 Extent of work

The technical work scope for each automatic control specialist shall be determined by the main contractor. The following is given for guidance:

The BMS and automatic controls specialists shall design, supply, install, set to work, test and commission the complete automatic control and building management system required to serve all building services installations specified, in the project specification, unless specifically stated otherwise hereafter. The scope shall incorporate all control outstations, software, control field devices, valve and damper actuators, inverters, all controls wiring, including carrier systems, all power wiring from isolators provided by the electrical contractor, setting to work, commissioning and all documentation and training necessary to allow the user to operate the installation both reliably and safely.

The BMS & specialist control systems suppliers shall provide all works necessary to provide a fully compliant installation, the works shall include but are not limited to those described below. The BMS & specialist control systems suppliers shall refer to all contract documents and provide all necessary controls instruments, engineering and commissioning to ensure a coherent installation, whether or not they are described in this section.

2.2.2 Technical Work Scope

- Provide – includes design, supply, deliver, off load, move to work location, install, set to work test and commission, documentation and logbook
- Supply – includes purchase, provide warranty for product, transport to site, unload, move to and fix in final location
- Design – includes the review of the specification with positive suggestions for improvement of the works, the sizing and selection of all control equipment, the sizing of all enclosures, the configuration of relay logic and plant interlocks, the generation of the functional design specifications, the writing and configuration of software routines, the sizing of control and power cables and associated carrier systems, the sizing and selection of all protective devices (such as fuses/MCBs), co-ordination of the installation with all other Contractors
- Install – includes all fixing, brackets, supports, builders work, and fire protection
- Install – includes all software, outstation configuration, integration to the head end, networks and configuration, graphics and management reports
- Set to work (automatic controls) – includes all electrical safety checks, stroking actuators, calibration of sensors, operational strategy documentation, software and testing procedures
- Set to work (electrical services) - includes all electrical safety checks, motor rotations, operational strategy and documentation and testing procedures and the provision of all IET test certificates associated with the automatic controls works
- Commission – includes commissioning plan, co-ordination and management of third party suppliers, testing the system both on and off site and demonstration to the Client
- Documentation – includes all: test certificates, testing procedures records, record drawings, operating and maintenance manuals and the health and safety file
- Log book – as described in CIBSE TM31.

2.2.3 BMS Controls Specialist

The BMS specialist shall provide all works as described in the MEP specification and the following:

1. Provide functional design specification incorporating general control principles, outline panel and equipment schedules and system architecture.
2. Provide plant layout drawings identifying specific location of equipment to be installed in public areas, general location of equipment to be installed in plantrooms, wiring routes. The equipment shall be identified on the drawings with unique reference numbers.
3. Provide control panel design wiring diagrams showing protective devices, hardwired interlocking relays, control interfaces and field equipment.
4. Provide plant description of operation describing the general plant operation, the interlocking, user interfaces, alarm handling, thermal and safety control and set points.
5. Provide detailed plant and equipment schedules with specific manufacturers details, plant references and selected sizes.
6. Provide all necessary equipment controller, software, instruments and actuators and the like to provide a complete sitewide BMS.
7. Provide all necessary instruments and actuators described in the BMS points lists.
8. Provide all fan and pump inverters. Although small fans and pumps may be provided with integral starters the BMS specialist shall include costs for the starters within the BMS works package.
9. Provide hardwired interface to the inverters for control and a high-level interface for monitoring.
10. Provide all MCC/control panel, controls instruments, valves and actuators associated with the office air handling plants. Include 4 damper actuators for each of the inlet and the outlet connections.
11. Provide 24 Volt DDC controllers with integral differential pressure sensing and damper modulator for the VAV terminal units. Provide duct mounted return air CO2 sensing wired to the local the VAV controller. These shall be powered by the BMS specialist from a local control panel.
12. Provide office air quality sensing, CO2, VOC. PM2.5 and space temperature sensor for each tenant demise.
13. Provide all MCC/control panel, controls instruments, valves and actuators associated with the shower ventilation systems.
14. Provide all MCC/control panel, controls instruments and actuators associated with the basement smoke control system. The inverters shall be suitable for fire operation.
15. Provide all MCC/control panel, controls instruments and actuators for the bin store and reception toilet ventilation systems.
16. Provide all MCC/control panel, controls instruments and actuators for the boiler house ventilation systems.
17. Provide all MCC/control panel, controls instruments actuators and valves associated with the heating system.
18. Provide all MCC/control panel, controls instruments and valves associated with the cooling system.
19. Provide all monitoring of the chilled and heating water treatment systems.
20. Provide all MCC/control panel, control and monitoring systems associated with the landlord/tenant office cooling/heating systems.
21. Provide all control panel, control and monitoring systems associated with the landlord/tenant retail cooling/heating systems.
22. Provide all controls instruments and actuators associated for the fan coil units. The 2 port PICV 24 Volt valves and actuators, the controls transformer and all sensors shall be free issued to the FCU manufacturer for wiring off site. The FCU manufacturer shall provide fan interface card for enable and monitoring and the condensate pump.
23. Provide all necessary BMS/EMS networks, software communications, licences, graphics user interfaces and the like to form a complete system. The converged network shall be provided by a separately specified converged network specialist.

24. Provide all necessary control and safety strategy both hardwired and software.
25. Provide management of the interfaces of each disparate control system onto a common sitewide BMS platform.
26. Provide high-level and hardwired interface to the firefighting lobby smoke control system.
27. Provide monitoring of the smoke damper control system both hardwired at the BMS panels for smoke fan operation and software for the production of graphics of all field and virtual points associated with the smoke damper control system.
28. Provide high-level and hardwired interface to the Generator.
29. Provide controls interface to the door air curtains.
30. Provide monitoring of the accessible toilet alarm system.
31. Provide monitoring of the refuge alarm system.
32. Provide high-level interface to the DX cooling systems, with full graphics of all field and virtual points associated with the DX cooling system
33. Provide monitoring of the domestic hot water heat maintenance tape system and cold water trace heating systems.
34. Provide monitoring of the potable cold water booster set - Integral controls and starters supplied, installed and commissioned by the mechanical contractor. The controls specialist shall carry out all interconnecting wiring between the tanks, Tanktronic, isolation valves and the pump control panel.
35. Provide for the rainwater attenuation system level switches, discharge valve actuators, control of and interconnecting cabling to the discharge pump set.
36. Provide controls interface to the incoming water leak detection systems.
37. Provide temperature sensing and water level sensing in the mains incoming water tanks and monitoring of the Tanktronic systems.
38. Provide monitoring of the sump pumps.
39. Provide monitoring of the cat 5 booster tanks and systems.
40. Provide monitoring of the LTHW, CHW and domestic water treatment systems.
41. Provide MCC/control panel and all controls instruments, actuators, manual reset high temperature cut out and spring shut valves associated with the domestic hot water systems.
42. Provide MCC/control panel and control instruments, actuators and inverters associated with the LTHW/domestic hot water pumping systems.
43. Provide gas & CO detection system for the boiler house and gas detection system for the gas meter room.
44. Provide a 1 hour UPS backup for the gas and CO detection system.
45. Provide motorised gas valves and associated interlocks to the gas detection/fire alarm system.
46. Provide monitoring of the gas meters.
47. Provide all landlords domestic water meters, as identified on the PHE schematics and specification in compliance with regulation 4 of the water (water fittings) regulations WRAS approved complete with M-bus conductivity and connect these to the M-bus BMS/EMS energy monitoring system.
48. Provide central plant heat meters (alternatively, mag flowmeters with matched temperature sensors) complete with separate outputs for flow monitoring and connect these to the sitewide BMS. These meters do not form part of the energy billing system, but they form part of the energy monitoring and control strategy systems.
49. Provide MID approved heat meters.
50. Provide monitoring of the LV board and distribution board electrical meters and connect these to the sitewide BMS.

51. Provide monitoring of the MCC electrical meters connect these to the sitewide EMS forming part of the tenant billing and energy monitoring system.
52. Provide monitoring of the fire alarm system
53. Provide monitoring of the electrical ATS(s)
54. Provide all actuators for ventilation dampers that require to be operated by the BMS
55. Provide all control valves and actuators that require to be operated by the BMS. All control valves shall be 2 port PICV 24V modulating.
56. Provide a weather station measuring: outside air temperature, outside RH, wind direction, wind speed, PM2.5, solar intensity, nitric oxide, nitrogen dioxide, Trioxygen.
57. Provide all MCCs and control panels and support frames. All panels located outside the building shall be IP65 rated and complete with anti-condensation heating.
58. Provide all control panels and support frames. All panels located outside the building shall be IP65 rated and complete anti-condensation heating.
59. Provide all power wiring and carrier system from the MCC to the MEP plant and equipment. All life safety cabling shall be to BS 8519 category 3. The power wiring shall include all on load plant isolators. Inverters require early brake/late make auxiliary contacts wired in series with the enable signals.
60. Provide all controls wiring and carrier system from the MCCs/control enclosures to the MEP plant and equipment.
61. Provide BACnet MSTP network for the VAV terminal units.
62. Provide BACnet/MSTP network for the FCUs. There shall be one network per tenant.
63. Provide BACnet/MSTP network for the heat meters.
64. Provide Modbus network for the electrical meters and ATS monitoring.
65. Provide M-bus network for the domestic water system meters.
66. Provide all interlocking cabling between the boiler monitoring safety panels and the boilers and associated pumps.
67. Provide a fully configured BMS head end supervisor operating as a thick client server suitable for unlimited simultaneous users connected via any web browser, inclusive of all operating software, email functions. The BMS specialist shall provide a 30-minute UPS for the head end workstation. The system shall be complete with HTML 5 SVG, dynamic graphics and display on demand all field and virtual points that form the project.
68. Provide the complete control system engineering and configuration.
69. Provide all operating software, firmware and licences. Licences shall allow 100% increase of all field and virtual points at contract closure.
70. Provide the energy monitoring and tenant billing package. The primary costs include an off site hosted solution provided by specialist supplier with an alternative and on-site hosted solution provided and managed by the BMS specialist.
71. Provide fully configured DDC controllers complete with all necessary operating software to manage and supervise the MEP plant and equipment.
72. Provide fully integrated BMS/controls and plant testing, setting to work and commissioning; a detailed test and commissioning plan along with the handover plan shall be provided by the BMS specialist. The Mechanical and Environmental reports shall be constructed and completed by the Building Services Contractors.
73. Provide attendance for all fire alarm and black building testing associated with the MEP plant and equipment.
74. Provide a full witness of the automatic control systems to the main contractor.
75. Provide a full witness of the automatic control systems to the client.
76. Provide a completion report of the installation, testing and demonstration of the automatic control systems.

77. Provide seven-day running (environmental testing) continuous operation of the plant and equipment to demonstrate plant stability.
78. Provide the automatic control system Operating and maintenance manuals.
79. Provide assistance with production of the building log book.
80. Provide training of operators and documentation for the FM team.
81. Provide return visits to retune the system operations.
82. Provide all necessary consumables for the project.

3 Controls Plant and Equipment Interfaces and Plant Operation

3.1 Standard Technical Requirements Description of Plant and Systems Operation

3.2 Description Of Operation

The BMS specialist shall be responsible for development of the description of operations, based upon the information provided in the contract specification and on the drawings. The BMS specialist shall liaise with all major plant suppliers such that all requirements of theirs are included in the design. The description of operations shall include all necessary explanation for the plant operation and the construction of the software.

The normal method by which the plant is started and stopped.

- Hardwired interlocks
- Software interlocks
- Normal operations
- Operation on a sensor fault
- Operation in a power failure and restart
- Operation on network failure
- Operation in a fire mode
- Demands sent to other systems
- Demands received from other systems
- Initial operating set points
- Initial alarm set points
- The reaction of each plant item to a fault condition
- Head end adjustments
- Head end displayed information
- Information transmitted remotely
- Alarm messages and the response required from the operator.

3.3 System Set Points

All operating set points shall be adjustable between limits from the display units and from the BMS head end supervisor.

3.4 Office Air Conditioning

The offices are provided with 4 pipe fan coil units that have return air temperature sensors for temperature control and supply air temperature sensor for monitoring and control if the return air fails.

Fresh air to the tenant demise is provided from the office air handling plants via variable volume terminal units.

The fan coil units are enabled for occupancy, warm up, low space temperature protection, purge and during the plant extension routines. The fan coil unit runs as a fixed speed during normal occupancy with elevated speed during warm up and low and high space temperature protection. The return air set point nominally (21)^{o}C shall be adjustable (between limits) through the BMS head end supervisor and through the touchscreen mounted on the floor master controller.

The fresh air is enabled during occupancy and for the purge period with the terminal units (supply and extract) operating at the same volume and controlled to maintain a nominal maximum return air CO2 value (800)ppm. This value is user adjustable (between limit) at the BMS head end supervisor and the floor master controller touchscreen.

Chilled and LTHW is circulated to the fan coil units from the landlords provided plate heat exchanger pump set. The pump sets are enabled whenever heating or cooling is required as well as for water quality circulation routine.

The BMS specialist shall provide a floor space temperature detector that is used as part of the optimiser and control and manage the pump speed to maintain system differential pressure set point. The BMS specialist shall provide an end of line 2 port PICV that shall modulate open if the pumps are at minimum speed and the differential pressure set point remains above set point and for water quality routine.

The fan coil controller's shall be freely programmable DDC devices communicating BACnet/MSTP to the floor master controller.

The VAV controller shall be a freely programmable DDC controller communicating BACnet/MSTP to the AHU control panel. The controller shall incorporate the damper actuator and the cross flow grid differential pressure sensor for the determination of air volume.

3.4.1 Controls Hardware

The BMS specialist shall provide all controllers, control transformer, supply and return air temperature sensors, 2 port (0-10v) PICV modulating valves and actuators for the fan coil control system. This equipment shall be free issued to the fan coil unit manufacturer for mounting and wiring within the appropriate control panels. These panels shall be provided by the FCU manufacturer.

The controls transformer and all LV power shall be in a separate door interlocked form 1 control panel mounted on the side of the fan coil unit. The ELV DDC controller shall be mounted in a separate non-door interlocked panel into which all ELV wiring shall be marshalled. This is a requirement to have two separate panels (one with LV and one with ELV services) to facilitate live working during testing, commissioning and maintenance.

The FCU manufacturer shall provide a 3 meter trailing fan coil unit power lead, from the power section, which shall be connected to the soffit mounted unswitched fused spur by the electrical contractor.

The FCU manufacturer shall install the supply air temperature sensor in the discharge of the FCU and connect all actuators and the control signal for the fans to the DDC controller. The return air temperature sensor with a 5 meter trailing lead shall be connected to the controller and coiled up. All cabling associated with the equipment both within the panel and the ceiling void shall be LSOH (PVC shall not be acceptable).

The FCU manufacturer shall provide the condensate pump that shall start automatically on water detection and shall be monitored by the sitewide BMS.

The FCU shall be provided with an integral control/monitoring card that shall be used to start/stop the fan, provide speed control and provide either a running or a fault signal.

Within the open plan space fan coil unit shall be controlled by return air temperature sensors. If this sensor is out of range then the fan coils shall be controlled to the supply air temperature sensor with a fixed value of (17)^{o}C.

The BMS specialist shall provide the BACnet/MSTP network for the tenant fan coil units and wire this back to the floor master controller. Each tenant shall have a separate network and separate floor master controller.

The BMS specialist shall provide and install the 24V VAV controller and power this from the AHU panel. The BMS specialist shall connect the air cross flow grid pressure sensor nipples to the BMS controller differential pressure sensor. The BMS specialist shall provide the BACnet/MSTP network between the VAVs units and the AHU control panel.

3.4.2 System Operation

The offices shall be air conditioned by fan coil units that are enabled to suit the local system optimiser with fresh air provided from the office air handling plant.

Each tenant space shall be provided with a floor master controller that shall control and manage the heat exchangers and associated pump sets, it shall be the master controller for the enable of the fan coil units and shall call for the operation of the ventilation plant and the modulation of the VAVs terminal units.

The tenant optimiser held within the landlords PHEX control panel (floor master controller) enables the fan coil units for optimised warm up and cool down, occupancy, low and high space temperature protection.

A building wide purge routine shall be provided that when active runs the tenants office fan coil units at full speed with a nominal return air set point of (21)°C. and dead bands of (±5)°C. This routine is selectable from the BMS head end supervisor and runs for (4) hours and then reverts to normal automatic control. During this mode the office AHUs also operate with a supply air set point of (21)°C. and dead bands of (±5)°C. The VAV units shall be set to operate at maximum airflow.

The optimiser shall enable the fan coil units for warm up to achieve space temperature set point of (20)°C. at occupancy time. During this period the fan coil units shall run at full speed with the heating valve modulated to maintain the return air set point of (35)°C. If any FCU achieves its nominal space set point (22)°C. then normal operation shall commence however, the chilled water valve shall remain closed throughout any warmup period. The warmup period shall have a maximum of (2)hours search time.

The optimiser shall enable the fan coil units for low space temperature protection operating the fan coils as for warm up if the space temperature is <(14 ± 2)°C.

During the occupancy period the fan coil return air temperature sensor shall be used to modulate in sequence with a dead band of (±1)°C and PI control the heating and the cooling coil.

The supply air temperature sensor shall be used to override the control output to the cooling and heating valve to maintain a minimum supply air temperature of (14)°C. and a maximum supply air temperature of (30)°C. These values be manually adjustable on a global command from the BMS head end supervisor between limits of ± 5°C.

Alternatively the BMS specialist shall provide cascade control for the fan coil unit such that the supply air temperature is reset between limits 14° C to 30° C based upon the heating/cooling demand from the space and the supply air temperature sensor controls in sequence the heating electric coil and the cooling valve to achieve the supply air set point.

If at any time the space temperature monitored by the common space temperature sensor is >(28)°C. then the fan coil units shall be set to operate at full speed and the appropriate office air handling plant set to work. The fan coil cooling valves shall be modulated to provide a (20)°C supply air temperature and the system remain operational until the common space temperature sensor is <(24)°C. The upper and lower limit room temperatures shall be adjustable at the BMS head end supervisor ±(3)°C.

Each fan coil unit shall have a nominal set point and adjustable offset set point all of which can be manipulated through the BMS head end supervisor. The nominal set point (21)°C can be adjusted by a level 3 user by (±3)°C this value when adjusted remains fixed. The adjustable offset set point can be altered by any user by (±3)°C. from either the BMS head end, the user interface or the floor master controller. This offset however reverts to 0 at 02.00 every day.
To accommodate excessive external temperatures the BMS shall automatically reset the fan coil unit nominal set point such that for each 1°C. that the outside air temperature is above 25°C. (adjustable at the head end supervisor 25°C to 35°C) the nominal set point shall be increased by 1°C. And for each 1°C. that the outside air temperature is below 5°C. (adjustable at the head end supervisor 5°C. down to -10°C. the nominal set point shall be reduced by 1°C. The adjustment limit shall however not allow the return/room air set point to rise above 26°C. or fall below 19°C. When this auto reset is active Indication shall be provided on the BMS head end supervisor on the floor graphic displays.

The fan coil unit shall generally operate at a fixed speed. The BMS specialist shall set the fan speeds for each fan coil unit individually (at possible different values determined during commissioning) based upon a minimum speed of (60)%. Each fan coil unit shall have a user adjustable value above that set point.

Each fan coil unit shall be provided with the software auto/off/on switch that is adjustable from the BMS head end supervisor. If ON is selected then the FCU shall operate normally for a maximum of (4) hours and return to auto. If off is selected then the AHU will not operate however valve exercise and water quality routines remain active.

Heating/Cooling Demands

The floor master controller shall monitor the fan coil unit valve positions and enable the duty heating or cooling circulating pump whenever >(5) FCU valves are >(15)% open or if (1) valve is >(80)% open. The (80)% values shall be user adjustable, by a level 3 user, between (80 to 15)%. The demand shall remain active until all FCU valve are closed for >(5) minutes.

The primary side PHX control valve shall be modulated to maintain the flow temperature set point.

Sensor Failure

If the return air sensor fails then the FCU shall operate to a constant supply air temperature of (17)^{o}C.

Condensate Pump Fault

If there is a condensate pump fault then the FCU shall continue to operate however the cooling valve shall remain closed.

Floor Plant Extension Button

Generally the fan coil unit operate to the plant optimiser however tenant floor plant extension buttons both physical (mounted on the floor plate) and software switch indicated on the floor graphic shall be provided. When this push button has been pushed the fan coil units in the particular area shall run under normal control for (4) hours and then revert to auto control. The appropriate office ventilation plant and the general building toilet extract systems shall be enabled at this time.

Global Commands

The BMS specialist shall configure global commands at the head end supervisor for use both during commissioning and the maintenance team. The global commands that shall be applied on a tenant by tenant basis include:

- Set all fan coil units to auto/off/on operation
- Reset all nominal temperature set point between the value of (18 to 25)^{o}C.
- Reset all offsets set points to 0.
- Set the cooling valve to fully open, fully closed or auto control
- Set the heating valve to fully open, fully closed or auto control.

The global commands that shall be applied on floor by floor basis include:

- Set all fan coil units to auto/off/on operation
- Reset all nominal temperature set point between the value of (18 to 25)^{o}C
- Reset all offsets set points to 0.

The last given global command takes precedence.

Whenever plant is set to ‘ON’ it shall run in that state for (4) hours and then revert to auto control.

Graphic Display

At the BMS head end supervisor and the office tenant floor master control panel the status of each fan coil unit shall be available via the dynamic graphic. However, this information shall also be provided in tabular form such that the status of individual fan coil unit items can be seen at the same time on a floor by floor basis.

Fan coil unit	Status	Fan speed	Nominal Set point	Offset adjustment	Actual controlling set	Return/space temperature	Heating valve out put	Cooling valve output	Supply air temperature	Condensate pump fault	Maintenance routine failure	Fan alarm
Reference number	On/off	%	°C.	± °C.	°C.	°C.	%	%	°C.			
Reference number	On/off	%	°C.	± °C.	°C.	°C.	%	%	°C.			

The dynamic graphic shall be a floor plan that shall display on the first overview the return air /space temperature measured and the reference of the fan coil unit.

Drilling down from this overview the individual status of each fan coil shall be displayed as a dynamic graphic. On this graphic it shall be possible to adjust the fan speed, adjust the return/space temperature set point and manually control all of the analogue and digital outputs.

System Alarms

The BMS shall monitor the fan coil unit for status and raise alarms on system mismatch with a suitable grace time. The alarms raised shall be:

- Fan failing to run when commanded on
- Condensate pump fault
- Return/space temperature >(± 3)°C from set point. This value shall be automatically adjusted based upon the nominal set point and the offset being applied.
- Supply air temperature > (2)°C. above or below the upper and lower limit supply air set point
- Any part of the fan coil unit strategy operating in manual override. - This shall change the colour of the fan coil unit on the general graphic display.

Trend Logs

The BMS specialist shall set the following trends to be logged:

- Fan change of state - running/not running
- Supply air temperature
- Return/space temperature
- Return/space set point. This shall be the actual value required not the nominal or the offset but the actual value.

These values shall be set for (10) minute intervals however, the user shall be to adjust these to any reasonable value as a minimum 30 seconds for investigative maintenance routines.

Fan Coil Maintenance Strategy

The BMS specialist shall provide and configure software for a fan coil maintenance strategy program. When this maintenance strategy is active the fan coil unit shall be enabled, and the return air set point shall be set to (14)°C. The system shall run for (20) minutes and then return to auto for (5) minutes. The return air set point shall be set to (24)°C. and the system shall run for a further (20) minutes and then return to auto for (5) minutes and then revert to off.

An automatic report shall be generated for all fan coil units generally set out as the previously described general table for fan coil unit information. The maintenance fail alarm shall be active if during the cooling mode the supply air temperature has not fallen below (16)°C. or in the heating mode risen above (25)°C.

The routines shall be set to allow the FM team to select from a single click on the general adjustments page to select:

- Individual tenant
- whole floor
- whole building.

The selection of this routine is mainly carried out by the FM team however, the general building alarm shall be raised if any area has not had a test in the previous 800 hours.

When the routine is selected it is necessary that the central plant heating cooling systems are enabled along with the plate heat exchangers and the secondary side circulating pumps to the fan coil units. The pumps shall run irrespective of the position of the valves.

Valve Exercise Routine

At 02.00 each morning the heating and cooling valve shall be opened and closed fully once.

Water Quality Circulation Routine

Each fan coil unit cooling and heating valve shall be opened once per day for (1) hour and the appropriate circulation pumps operate at normal speed. This action should generally take place at (02.00) although this time shall be adjustable by the user. When this routine is active the landlord side PHX control valve shall remain closed.

Building Ventilation Purge

If the building/tenant ventilation purge is active then the fan coil units operate at full speed with a normal return temperature set point of (21)^{o}C. and dead bands of (±5)^{o}C.

3.5 Office Ventilation

The offices are provided with ventilation from variable volume fresh air heat recovery air handling plants. For the lower floors these are located on floor plantrooms on level 2, 3 and 4. These AHUs serves the 4 tenants on each floor plate. The upper floors levels 5, 6 and 7 are served by four AHUs mounted on the roof. These AHUs serve one tenant on each floor immediately below the AHU.

The AHU is enabled whenever the served tenant is in the occupancy mode or if building purge is required. The AHU when running provide air at variable temperature dependent on the outside air conditions and variable volume to maintain the distribution static pressure set point at the least favoured sensor.

When the AHU is off the valves are closed and the isolation dampers shut. In the stage 1 frost condition the heating valves are modulated to maintain an internal AHU temperature of (20)^{o}C with the cooling valve (20)% open. In a fire mode the AHU is shut down through hardwired interlocks.

The AHU provides air to the space via the VAV terminal units, these units are provided with freely programmable DDC controllers complete with integral modulating damper actuator and differential pressure sensor connected to the VAV cross flow grid. The VAV units are set to a nominal flow rate when the AHU is off (sufficient to maintain the AHU at 20% flow rate). During occupancy the VAVs units modulated between a minimum value (X)L/sec to the maximum design flow value (Y)L/sec to maintain the nominal CO2 set point of (800)ppm.

3.5.1 Controls Hardware

The BMS specialist shall provide a form 2 B type 2 control panel for each AHU. The 4 AHUs mounted on the roof require the IP 65 rated control panel to be within a weatherproof enclosure provided by the BMS specialist. These four panels require anti-condensation heaters in the control section and surge arrestor in the power section.

The power section shall include power feeds for all fans, associated devices such as thermal wheel, condensate pump and AHU lights.

The AHU shall be provided with EC motors with the power, control and Modbus connections wired by the AHU specialist to externally mounted weatherproof junction box. Where multiple fans are provided these shall be combined by the AHU specialist to the common terminal rail.

The EC motor shall be provided with Modbus output for general status monitoring and energy use. The enable, speed control and fault monitoring shall be through hardwired signals wired directly to the BMS outstation.

The BMS specialist shall provide all power and controls wiring from the BMS provided controls and power panel to the junction box. The power cabling shall include an on load isolator with auxiliary contacts wired to the EC motor enable circuit. Within the power section the BMS specialist shall provide a contactor that provides power to the fans. This contactor shall be powered via 24 Volt safety circuit linked through lockstop buttons mounted alongside of the supply and extract fan sections and through auxiliary contacts in the fan isolators. When the safety circuit broken the contactor shall open circuit and only remake when the circuit is healthy, and the reset button is operated. This reset button which forms part of a 3 wire latching circuit and is located within the non-door interlocked section of the control panel.

The BMS specialist shall provide all controls instruments and actuators and the 2 port PICV modulating control valves. The BMS specialist shall assume 4 actuators are required for the supply and exhaust dampers, these wired to common outputs and common end switch monitoring. The BMS specialist shall provide all interconnecting cabling between the controls instruments and actuators and the BMS provided control panel.

The AHU is controlled by the BMS supplied DDC web enabled controller that communicates to the sitewide BMS via the converged network utilising BACnet/IP. The controller is held within a non-door interlocked section of the AHU MCC and is provided with a backlit colour display mounted on the fascia of the panel. Where panels are mounted externally a clear plastic hinged cover shall be provided to protect the display screen.

The BMS specialist shall provide safety interlocks between the fire alarm system, the damper end switches, the manual reset high pressure discharge switch and the auto reset frost stat. If any of these are in a fault mode the supply fan shall shut down through hardwired interlocking.

The BMS specialist shall provide safety interlocks between the fire alarm system, damper end switches and the manual reset low pressure suction switch. If any of these are fault mode the extract fan shall shut down through hardwired interlocking.

The BMS specialist shall provide all software interlocking that would include hardwired interlocks, AHU software HOA switch, fan software HOA switch and no existing fan alarm. If any of these are in a fault mode then the AHU shall not be able to operate. Where software switches are provided if these are in the “HAND” mode then the fan or AHU shall be able to run assuming all hardwired interlocks are healthy. The system shall revert to auto after 4 hours, this time limit is only adjustable in software configuration mode.

The supply and extract fans shall be software interlocked with suitable time delays such that both are required to operate with the exception that during individual fan “HAND” operation then either all of the supply fans or all of extract fans run independent of the other supply or extract system.

The fascia of the control section shall include control circuit healthy lamp, a system running lamp, a fault lamp and a reset button.

The plant status and plant HOA switches shall form part of a GUI displayed on an android style backlit colour display panel. This panel shall be mounted on the fascia of the control enclosure shall act as a browser to the embedded graphics held within main plant controller. The plant graphic, which may be the same as the graphic displayed on the BMS head end supervisor, shall be held within the AHU controller and accessed via this web browser from the display panel. The user shall be to manipulate and review the plant status directly through this graphic with a user specific password. Any user shall be able to view the plant status directly through this graphic without any password required. The BMS specialist shall configure for each controller 3 users. User 1 shall have view only access, user 2 shall have the same right as user 1 and be able to access the plant and fan HOA switch, whilst user 3 can access all information using their unique password.

The EC fans require a manual speed control when operating in a manual mode. This manual speed control limited to a minimum of 20 Hz shall be available to the user through a user adjustable GUI knob displayed on the BMS head end supervisor and at the AHU control panel.

The major alarms when active shall illuminate the panel alarm lamp. When the alarm reset button is operated ALL existing alarms within this local controller shall be cleared.

The BMS specialist shall provide the terminal unit VAV controllers that shall be 24 Volt and powered from the AHU control panel. These controllers shall be DDC units with integral damper actuator and differential pressure sensing for the airflow grid. The BMS specialist shall provide the BACnet/MSTP network from the specific AHU VAV units back to the AHU control panel. The BMS specialist shall provide a return air CO2 sensor wired to the supply air VAV controller that shall be used to modulate the supply and extract units in unison.

The BMS specialist shall provide 24 Volt powered MID approved heat meters for each AHU measuring the total heating and the total cooling energy. These meters shall be connected BACnet/MSTP to the sitewide EMS and powered from the AHU control panel. The meter shall display on each AHU graphic the water entering and leaving temperatures, the water flow rates and the instantaneous energy. Separate metering graphic shall be provided for the sitewide services as part of the energy management system.

3.5.2 Operation

The AHU shall be enabled whenever a served tenancy is in the occupancy mode, or if the served tenant plane extension is active, or if the AHU BMS software HOA switch is in the hand position or if a building purge is required. The AHU shall run until the end of occupancy, the end of the purge period or for (4) hours when in the hand mode when it shall return to auto.

When the AHU is required to run the supply and extract isolation dampers shall be opened and when proven through hardwired interlocks the supply and extract fan shall be enabled assuming all interlocks are healthy.

Hardwired Interlocks

The supply fan hardwired interlocks include: damper isolation switch open, frost stat healthy, high pressure cut out healthy, fire alarm healthy. The software interlock (with suitable time delays) shall include hardwired interlocks, no existing fan alarm, extract fan proven running, no existing frost alarm, low outside air temperature hold off not active, and the AHU software switch in either hand or auto, the supply fan software switch in hand or auto.
The extract fan hardwired interlocks include: damper isolation switch open, low pressure cut out healthy, fire alarm healthy. The software interlock (with suitable time delays) shall include hardwired interlocks, no existing fan alarm, supply fan proven running, , and the AHU software switch in either hand or auto, the extract fan software switch in hand or auto.

Low Outside Temperature Hold Off

If the AHU is required to start when the outside air temperature is <(5)^{o}C then in the first instance the frost valve shall be opened fully and the appropriate heating pumps enabled, which in turn shall enable the heating system. The AHU shall be held off until the LTHW water temperature leaving the AHU is >(40)^{o}C. for >(5) minutes.

Frost Stat Trip

If the AHU has tripped on frost alarm then the frost valve shall be driven fully open, the AHU shut down. The AHU shall restart in the outside air low temperature condition once the auto reset frost stat has reset. If this fault occurs (3) times in (24) hours then the plant only restart when the frost fault is cleared at either the BMS supervisor or the control panel display screen, or the control panel alarm reset button is operated.

Stage 1 Frost Protection

If the plant is off and the outside air temperature is in stage 1 frost protection <(3)^{o}C. then the frost valve and the heating valve modulated to maintain a local temperature of (20)^{o}C. and the chilled water valve opened (25)%.

Motor Fault

The BMS shall monitor the fan status both via a fan differential pressure switch and individually via the Modbus connection to each fan.

If the fan has been called to run and the differential pressure switch has not made after a suitable grace time then the AHU shall shut down and an alarm raised.

If a fault is detected from an individual fan via the high level interface or by the hardwired fault connection then the AHU shall be shut down an alarm raised.

Plant Off State

When the AHU is off the supply and extract isolation dampers shall be closed, the thermal wheel off, the LTHW and CHW valves are closed, and the fan is off.

The remote VAV units shall be set to (X[1])L/sec.

Valve Exercise Routine

The heating and cooling valves shall be opened and closed fully in one cycle, once per day at 05.00.

Water Flush Routine

The LTHW water flush routine shall be initiated from the LTHW control panel and sent as a command to each AHU. When this command is active and if the AHU is off the heating valves shall be opened fully until the command is removed or the AHU is required to operate. Generally this shall be once per day for (1) hour.

The CHW water flush routine shall be initiated from the CHW control panel and sent as a command to each AHU. When this command is active and if the AHU is off the CHW valve shall be opened fully until the command is removed or the AHU is required to operate. Generally this shall be once per day for (1) hour.

Neither of these routines will be active in a stage 1 frost condition.

System Thermal Control

When the AHU is running in normal occupancy the supply air set point shall be achieved by modulation of the heating and cooling valves and the heat recovery system with a PI loop. The frost coil shall be controlled from an open loop overridden to maintain a maximum of coil temperature of (6)°C.

The supply air set point shall have two user selectable units, a toggle switch shall be provided on the BMS supervisor and at the AHU display panel to select either control strategy. This shall be either a constant temperature that is adjustable at the head end and the AHU display screen between limits (16 to 25)°C OR a variable temperature that is dependent on outside air temperature (To <10°C. Ts 25°C.: To >25°C. Ts 15°C.)

The control strategy shall always use the thermal wheel for the heating or cooling prior to using the reheat coil or the cooling coil.

The supply air set point shall have a dead band of ± 1°C. in which the thermal wheel shall be off, and the heating and cooling valve is closed.

If the outside air temperature is >(1)°C. above the return air temperature then the thermal wheel shall run at full speed, otherwise it shall vary between closed and full speed.

The frost valve shall be modulated between closed and fully open based on the outside air temperature such that at -5°C. the valve is fully open and at 5°C. the valve is closed. The open position of the valve shall however be overridden towards closed if the off frost Coil Temperature is >(6)°C.

---

[1] The VAV set point shall be the same on all floors and allow 25% of the system airflow.

Fan Speed Control

The supply and extract fans shall run at nominally the same speed to maintain the required system static pressure user adjustable (100 to 250)Pa. The extract fan speed shall however be limited such that it is always less that the supply fan speed but not less than 90% of the supply fan speed.

The minimum speed to the fan set shall be agreed with the motor supplier however this should not be less then (10)Hz, representing a 2 Volt output from the BMS controller. This 2 Volt output shall be the minimum value ever displayed on the BMS graphic unless of course the unit is off when 0 shall be displayed.

VAV Control

The VAV terminal units are controlled to maintain a nominal CO2 level of (800)ppm that is adjustable by the end user between (600 and 1000)ppm. The unit operate at minimum volume at set point increasing as the measured value rises.

When a tenant is out of occupancy the VAV units shall be set to (X)L/sec.

Building or Tenant Purge Routine

The BMS specialist shall provide the FM team with the facility to purge the whole building or part of the building with full fresh air when the building is generally out of occupancy.

The FM team shall be able to select each of the office AHUs individually to operate a purge routine. When this routine is selected the office AHU shall be enabled in the normal manner with a supply air set point of (21)°C. and dead bands of (±5)°C., The associated fan coil units ran at full speed with a nominal return air set point of (21)°C. and dead bands of (±5)°C. The VAV units will be set to maintain an upper limit of (100)ppm of CO2. This will force the VAVs units to their maximum design air flow rate.

Fire Mode

In a fire mode the AHU shall shut down through hardwired interlocks, with the dampers and valves closed. The valves shall however continue to operate for stage 1 frost protection, valve exercise and water quality routines.

AHU Maintenance Strategy

The BMS specialist shall provide and configure software for an AHU maintenance strategy program. When this maintenance strategy is active the AHU shall be enabled, and the supply air set point shall be set to (30)°C. The system shall run for (30) minutes and then return to auto for (5) minutes. The supply air set point shall be set to (15)°C and shall run for a further (30) minutes and then return to auto for (5) minutes and then revert to off. An automatic report shall be generated that describes the operation of the AHU in this test routine.

The maintenance fail alarm shall be active if during the cooling mode the supply air temperature has not fallen below (16)°C. or in the heating mode risen above (25)°C.

The maintenance fail alarm shall be active if during the cooling mode the air temperature across the cooling coil has not fallen by >(5)°C.

The maintenance fail alarm shall be active if during the heating mode the air temperature across the heating coils has not risen by >(5)°C.

To enable full airflow the VAV units shall operate to maintain a maximum CO2 level of (100)ppm.

The test routine shall include a report on the values received from the CO2 sensors and where these are more than (10)% different from each other a maintenance alarm shall be raised.

The routine is initiated manually by the FM team.

Sensor Faults

The control sensors shall be monitored and if out of range then alternative sensors shall be utilised for the control strategy.

- If the supply air temperature is out of range then the AHU thermal control shall be from the return air temperature sensor with a set point of (21)^{o}C
- If the outside air temperature is out of range then the frost coil shall be controlled to a nominal (6)^{o}C. from the frost leaving coil temperature sensor
- If the off frost coil sensor is out of range then use outside air temperature control
- If the supply air static pressure sensor is out of range then the supply and extract fans shall run at a nominal (30)Hz
- If the extract fan air static pressure sensor is out of range then the extract fan shall run at the same speed as supply fan.

System Alarms

The BMS shall monitor the office ventilation system for status and raise alarms on system mismatch with a suitable grace time.

The critical alarms, which shall be indicated on the AHU graphic and in the alarm list, illuminate the AHU fault lamp and be issued as an email shall be:

- Supply fan failing to run when commanded on
- Extract fan failing to run when commanded on
- Supply air static pressure <(50)pa when the supply fan is running
- Frost stat trip after 3 times
- Supply Damper failed to open
- Extract Damper failed to open
- High pressure cut out active
- Low pressure cut out active.

The maintenance alarms, which shall be indicated on the AHU graphic and when in the alarm list shall be:

- Filter dirty
- Supply air temperature ± 5°C. from set point
- Control Valve manually overridden
- Fan speed manually overridden
- Sensor out of range
- EC motor – overheat
- EC motor – general error.

Trend Logs

The BMS specialist shall set the following trends to be logged:

- Fan change of state - running/not running
- Supply duct static pressure set point
- Supply duct static pressure measured value
- Extract duct static pressure set point

- Extract duct static pressure measured value
- Supply fan speed
- Extract fan speed
- Outside air temperature
- Supply air set point
- Supply air measured temperature
- Off Frost Coil Temperature
- Off thermal wheel temperature
- Off Cooling coil temperature
- Cooling & Heating valve positions (BMS output)
- Thermal wheel exhaust air temperature
- Return air temperature
- AHU LTHW entering water temperature
- AHU LTHW leaving water temperature
- AHU LTHW flow rate
- AHU CHW entry water temperature
- AHU CHW leaving water temperature
- AHU CHW flow rate
- Accumulative heat energy
- Instantaneous heat energy
- Accumulative cooling energy
- instantaneous cooling energy
- Return air CO2 for each tenant
- Individual fan speed – HLI from fan
- Individual fan power – HLI from fan.

These values shall be set for (15) minute intervals however, the user shall be to adjust these to any reasonable value as a minimum 30 seconds for investigative maintenance routines.

3.6 Shower Room Ventilation

The female and male shower rooms are provided with ventilation from a MVHR unit complete with duct mounted reheat battery.

The units are enabled whenever the showroom time clock is active or if the PIR is active when the unit shall run for a minimum of 20 minutes.. The MVHR when running provides air at variable temperature (heating only) to maintain the return air temperature set point.

When the MVHR is off the valves are closed, if stage 1 frost is active the valves are driven fully open, in a fire mode the MVHR is shut down through hardwired interlocks.

3.6.1 Controls Hardware

The MEP specialist shall provide the MVHR units with integral motor protection and speed control complete with ELV terminals for remote enable, monitoring and speed control.

The BMS specialist shall provide a form 2B type 2 power board for the MVHR units and a separate form 1 control enclosures. The BMS specialist shall provide the temperature sensors, auto reset frost stat, plant monitoring differential pressure switches and the 2 port PICV valve and modulating actuator.

The door interlocked power section shall contain all LV power including the controls transformers and protection MCBs and where necessary the control UPS. Within the control section the only LV Service shall be the twin RCD protected socket that should be mounted on the sidewall between the power the control section. All other services within the control enclosure shall be ELV only.

The power section shall include an MID electrical meter with the display mounted on the fascia of the panel and connected via Modbus to the sitewide BMS.

The BMS specialist shall provide all power controls wiring from the MCC/control enclosure to the MVHR and all associated instruments actuators.

The units are controlled by the BMS supplied DDC web enabled controller that communicates to the sitewide BMS via the converged network utilising BACnet/IP. The controller is held within the non-door interlocked control panel and is provided with a backlit colour display mounted on the fascia of the panel.

The BMS specialist shall provide safety interlocks between the fire alarm system, the auto reset frost stat and the MVHR unit. If any of these are in a fault mode the supply MVHR shall shut down through hardwired interlocking.

The BMS specialist shall provide all software interlocking that would include hardwired interlocks, MVHR software HOA switch and no existing fan alarm. If any of these are in a fault mode then the MVHR shall not be able to operate. Where software switches are provided if these are in the “HAND” mode then the MVHR shall be able to run assuming all hardwired interlocks are healthy. The system shall revert to auto after 4 hours, this time limit is only adjustable in software configuration mode.

The fascia of the control section shall include control circuit healthy lamp, a system running lamp, a fault lamp and a reset button.

The plant status and plant HOA switches shall form part of a GUI displayed on an android style backlit colour display panel. This panel shall be mounted on the fascia of the control enclosure shall act as a browser to the embedded graphics held within main plant controller. The plant graphic, which may be the same as the graphic displayed on the BMS head end supervisor, shall be held within the MVHR controller and accessed via this web browser from the display panel. The user shall be to manipulate and review the plant status directly through this graphic with a user specific password. Any user shall be able to view the plant status directly through this graphic without any password required. The BMS specialist shall configure for each controller 3 users. User 1 shall have view only access, user 2 shall have the same right as user 1 and be able to access the plant and fan HOA switch, whilst user 3 can access all information using their unique password.

The major alarms when active shall illuminate the panel alarm lamp. When the alarm reset button is operated ALL existing alarms within this local controller shall be cleared.

The BMS specialist shall provide 24 Volt powered MID approved heat meters for each MVHR measuring the total heating energy. These meters shall be connected BACnet/MSTP to the sitewide EMS and powered from the AHU control panel. The meter shall display on each AHU graphic the water entering and leaving temperatures, the water flow rates and the instantaneous energy. Separate metering graphic shall be provided for the sitewide services as part of the energy management system.

3.6.2 Operation

The MVHR shall be enabled whenever the shower room time clock is active, or if the PIR is active or if the AHU BMS software HOA switch is in the hand position and all interlocks are healthy. The MVHR shall run until the end of occupancy, or if the PIR times out or for (4) hours when in the hand mode when it shall return to auto.

Hardwired Interlocks

The hardwired interlocks shall include fire healthy, frost stat healthy. The software interlock (with suitable time delays) shall include hardwired interlocks, no existing fan alarm, low outside temperature hold off not active and the MVHR software switch in either hand or auto.

Low Outside Temperature Hold Off

If the MVHR is required to start when the outside air temperature is <(5)°C then in the first instance the heating valve shall be opened fully and the appropriate heating pumps enabled, which in turn shall enable the heating system. The MVHR shall be held off until the LTHW water temperature leaving the MVHR is >(40)°C. for >(5) minutes.

Frost Stat Trip

If the MVHR has tripped on frost alarm then the heating valve shall be driven fully open, the AHU shut down. The AHU shall restart in the outside air low temperature condition once the auto reset frost stat has reset. If this fault occurs (3) times in (24) hours then the plant only restart when the frost fault is cleared at either the BMS supervisor or the control panel display screen, or the control panel alarm reset button is operated.

Stage 1 Frost Protection

If the plant is off and the outside air temperature is in stage 1 frost protection <(3)°C. then the heating valve shall be opened fully.

MVHR Fault

The BMS shall monitor the individual fan flow status and the common status from the MVHR and shall raise an alarm and shutdown unit on any fault.

Valve Exercise Routine

The heating valves shall be opened and closed fully in one cycle, once per day at 05.00.

Water Flush Routine

The LTHW water flush routine shall be initiated from the LTHW control panel and sent as a command to each AHU. When this command is active and if the MVHR is off the heating valves shall be opened fully until the command is removed or the AHU is required to operate. Generally this shall be once per day for (1) hour.

Neither of these routines will be active in a stage 1 frost condition.

System Thermal Control

When the AHU is running in normal occupancy the supply air set point shall have two user selectable units, a toggle switch shall be provided on the BMS supervisor and at the MVHR display panel to select the control strategy. This shall be either a constant temperature that is adjustable at the head end and the CE display screen between limits (16 to 25)°C OR a variable temperature that is rescheduled between limits (18 to 28)°C. to maintain the return air set point. The nominal return air temperature set point is (23)°C. that is user adjustable by a level 2 user (± 3)°C, that reverts to 0 offset at midnight . A level 3 user can permanently change this nominal set point (± 3)°C.

The return air set point shall have a dead band of (± 1)°C. in which no resetting supply temperature shall take place.

Fan Speed Control

The supply and extract fans shall run at a fixed speed determined during commissioning.

Fire Mode

In a fire mode the MVHR shall shut down through hardwired interlocks. The valves shall however continue to operate for stage 1 frost protection, valve exercise and water quality routines.

Sensor Faults

The control sensors shall be monitored and if out of range then alternative sensors shall be utilised for the control strategy.

- If the supply air temperature is out of range then the MVHR thermal control shall be from the return air temperature sensor with a set point of (21)^{o}C

System Alarms

The BMS shall monitor the system for status and raise alarms on system mismatch with a suitable grace time.

The critical alarms, which shall be indicated on the AHU graphic and in the alarm list, illuminate the AHU fault lamp and be issued as an email shall be:

- MVHR fault.

The maintenance alarms, which shall be indicated on the AHU graphic and when in the alarm list shall be:

- Supply air temperature ± 5°C. from set point but only in the heating mode
- Extract air temperature ± 5°C. from set point
- Control Valve manually overridden
- Unit manually overridden
- Sensor out of range.

Trend Logs

The BMS specialist shall set the following trends to be logged:

- Fan change of state - running/not running
- Supply air set point
- Return air set point
- Supply air measured temperature
- Extract air measured temperature
- Heating valve positions (BMS output)
- AHU LTHW entering water temperature
- AHU LTHW leaving water temperature
- AHU LTHW flow rate
- Accumulative heat energy
- Instantaneous heat energy.

These values shall be set for (15) minute intervals however, the user shall be to adjust these to any reasonable value as a minimum 30 seconds for investigative maintenance routines.

3.7 Office Toilet Ventilation

The office toilet ventilation system is mounted on the roof with two systems, one serving the East side and the other the West.

The AHU comprises run and standby supply fan run and standby extract fan with isolation damper filters, heat recovery and heating/cooling coils is enabled if the toilet time clock is active OR if any of the office AHUs are running in the occupancy mode. The AHUs provide air at constant volume and variable temperature to maintain the required return air temperature set point.

When the AHU is off the valves are closed and the isolation dampers shut. In stage 1 frost condition the heating valves are modulated to maintain a local temperature of (20)^{o}C with the cooling valve (20)% open. In a fire mode the AHU is shut down through hardwired interlocks.

3.7.1 Controls Hardware

The BMS specialist shall provide a common form 2B type 2 power panel for the two AHUs and separately form 1 panels located alongside the AHUs that contain the control equipment. The panels on the roof require to be IP 65 rated control and to be within a weatherproof enclosure provided by the BMS specialist. The panels require anti-condensation heaters in the control section and surge arrestor in the power section. Where inverters are provided within the panel then heating is required in the power section.

The power section shall include an MID electrical meter with the display mounted on the fascia of the panel and connected via Modbus to the sitewide BMS. Each AHU shall in addition have an MID approved electrical meter that shall be connected to the site wide EMS and forms part of the tenant billing and energy monitoring strategy.

The AHU fans are inverter controlled with inverters provided by the BMS specialist complete with hardwired and BACnet interface to the BMS controllers. The BMS specialist shall provide inverters IP 65 enclosures or alternatively mount these within the BMS power board power section.

The BMS specialist shall provide all power and controls wiring from the BMS provided controls and power panel to the inverters, the power cabling shall include an on load isolator with auxiliary contacts wired to the inverter enable circuit, via a fan lockstop button.

The BMS specialist shall provide all controls instruments and actuators and the 2 port PICV modulating control valves. The BMS specialist shall assume 4 actuators are required for the supply and exhaust dampers, these shall be wired to common outputs and common end switch monitoring. The BMS specialist shall provide all interconnecting cabling between the controls instruments and actuators and the BMS provided control panel.

The AHU is controlled by the BMS supplied DDC web enabled controller that communicates to the sitewide BMS via the converged network utilising BACnet/IP. The controller is held within the non-door interlocked control panel and is provided with a backlit colour display mounted on the fascia of the panel. The display shall be protected by a clear Perspex hinged cover plate

The BMS specialist shall provide hardwired safety interlocks between the fire alarm system, the damper end switches, the manual reset high pressure discharge switch and the auto reset frost stat. If any of these are in a fault mode the supply fan shall shut down through hardwired interlocking. The supply fan enable shall be hardwired interlocked with the airflow proving from the other supply fan such that only one can run at a time.

The BMS specialist shall provide hardwired safety interlocks between the fire alarm system, damper end switches and the manual reset low pressure suction switch. If any of these are fault mode the extract fan shall shut down through hardwired interlocking. The extract fan enable shall be hardwired interlocked with the airflow proving from the other extract fan such that only one can run at a time.

The BMS specialist shall provide all software interlocking that would include hardwired interlocks, AHU software HOA switch, fan software HOA switch and no existing fan alarm. If any of these are in a fault mode then the AHU shall not be able to operate. Where software switches are provided if these are in the “HAND” mode then the fan or AHU shall be able to run assuming all hardwired interlocks are healthy. The system shall revert to auto after 4 hours, this time limit is only adjustable in software configuration mode.

The supply and extract fans shall be software interlocked with suitable time delays such that the extract can run without the supply, but the supply cannot run without the extract.

The run and standby fans shall duty rotate on a weekly basis and in a fault mode.

The fascia of the control section shall include control circuit healthy lamp, a system running lamp, a fault lamp and a reset button.

The plant status and plant HOA switches shall form part of a GUI displayed on an android style backlit colour display panel. This panel shall be mounted on the fascia of the control enclosure shall act as a browser to the embedded graphics held within main plant controller. The plant graphic, which may be the same as the graphic displayed on the BMS head end supervisor, shall be held within the AHU controller and accessed via this web browser from the display panel. The user shall be able to manipulate and review the plant status directly through this graphic with a user specific password. Any user shall be able to view the plant status directly through this graphic without any password required. The BMS specialist shall configure for each controller 3 users. User 1 shall have view only access, user 2 shall have the same right as user 1 and be able to access the plant and fan HOA switch, whilst user 3 can access all information using their unique password.

The inverters require a manual speed control when operating in a manual mode. This manual speed control limited to a minimum of 20 Hz shall be available to the user through a user adjustable GUI knob displayed on the BMS head end supervisor and at the AHU control panel.

The major alarms when active shall illuminate the panel alarm lamp. When the alarm reset button is operated ALL existing alarms within this local controller shall be cleared.

The BMS specialist shall provide 24 Volt powered MID approved heat meters for each AHU measuring the total heating and the total cooling energy. These meters shall be connected BACnet/MSTP to the sitewide EMS and powered from the AHU control panel. The meter shall display on each AHU graphic the water entering and leaving temperatures, the water flow rates and the instantaneous energy. Separate metering graphic shall be provided for the sitewide services as part of the energy management system.

3.7.2 Operation

The AHU shall be enabled whenever the office toilet time clock is active, or if any office AHU is running in occupancy or if the AHU BMS software HOA switch is in the hand position. The AHU shall run until the end of occupancy, or if the office AHU stops (whichever is the later) or for (4) hours when in the hand mode when it shall return to auto.

When the AHU is required to run the supply and extract isolation dampers shall be opened and when proven through hardwired interlocks the duty supply and duty extract fan shall be enabled assuming all interlocks are healthy.

Hardwired Interlocks

The supply fan hardwired interlocks include: damper isolation switch open, frost stat healthy, high pressure cut out healthy, other fan not running, fire alarm healthy. The software interlock (with suitable time delays) shall include hardwired interlocks, no existing fan alarm, extract fan proven running, no existing frost alarm, low outside air temperature hold off not active, and the AHU software switch in either hand or auto, the duty supply fan software switch in hand or auto.

The extract fan hardwired interlocks include: damper isolation switch open, low pressure cut out healthy, other extract fan not running, fire alarm healthy. The software interlock (with suitable time delays) shall include hardwired interlocks, no existing fan alarm, and the AHU software switch in either hand or auto, the duty extract fan software switch in hand or auto.

Low Outside Temperature Hold Off

If the AHU is required to start when the outside air temperature is <(5)°C then in the first instance the frost valve shall be opened fully and the appropriate heating pumps enabled, which in turn shall enable the heating system. The AHU shall be held off until the LTHW water temperature leaving the AHU is >(40)°C. for >(5) minutes.

Frost Stat Trip

If the AHU has tripped on frost alarm then the frost valve shall be driven fully open, the supply section shut down. The supply section shall restart in the outside air low temperature condition once the auto reset frost stat has reset. If this fault occurs (3) times in (24) hours supply section shall only restart when the frost fault is cleared at either the BMS supervisor or the control panel display screen, or the control panel alarm reset button is operated.

Stage 1 Frost Protection

If the plant is off and the outside air temperature is in stage 1 frost protection <(3)°C. then the frost valve and the heating valve modulated to maintain a local temperature of (20)°C. and the chilled water valve opened (25)%.

Fan Motor Fault

The BMS shall monitor the fan status both via a fan differential pressure switch and individually via the BACnet connection to each fan inverter.

If the duty fan has been called to run and the differential pressure switch has not made after a suitable grace time then the fan set shall duty rotate and the new duty enabled in the normal manner. A BMS alarm shall be raised for the failed fan.

If both duty supply fans fail then the supply section of the AHU shall be shut down with the dampers shut and the valves off. The extract shall continue to operate normally.

If both duty extract fans have failed then the supply and extract sections of the AHU shall be shut down in the normal manner.

Plant Off State

When the AHU is off the supply and extract isolation dampers shall be closed, the thermal wheel off, the LTHW and CHW valves are closed, and the fan is off.

Valve Exercise Routine

The heating and cooling valves shall be opened and closed fully in one cycle, once per day at 05.00.

Water Flush Routine

The LTHW water flush routine shall be initiated from the LTHW control panel and sent as a command to each AHU. When this command is active and if the AHU is off and the valve has not been more than (50%) open in the previous (18) hours the heating valves shall be opened fully until the command is removed or the AHU is required to operate. Generally this shall be once per day for (1) hour.

The CHW water flush routine shall be initiated from the CHW control panel and sent as a command to each AHU. When this command is active and if the AHU is off the CHW and the valve has not been more than (50%) open in the previous (18) hours the cooling valve shall be opened fully until the command is removed or the AHU is required to operate. Generally this shall be once per day for (1) hour.

Neither of these routines will be active in a stage 1 frost condition.

System Thermal Control

When the AHU is running in normal occupancy the supply air set point shall be achieved by modulation of the heating and cooling valves and the heat recovery system with a PI loop. The frost coil shall be controlled from an open loop overridden to maintain a maximum of coil temperature of (6)°C.

The supply air set point shall have two user selectable units, a toggle switch shall be provided on the BMS supervisor and at the AHU display panel to select either control strategy. This shall be either a constant temperature that is adjustable at the head end and the AHU display screen between limits (16 to 25)°C OR a variable temperature that is rescheduled between limits (18 to 28)°C. to maintain the return air set point. The nominal return air temperature set point is (23)°C. that is user adjustable by a level 2 user (± 3)°C, that reverts to 0 offset at midnight . A level 3 user can permanently change this nominal set point (± 3)°C.

The return air set point shall have a dead band of (± 1)°C. in which no resetting supply temperature shall take place. The supply air set point shall have a dead band of (± 1)°C in which the heating cooling valve shall remain closed and the thermal wheel off.

The control strategy shall always use the thermal wheel for the heating or cooling prior to using the reheat coil or the cooling coil.

If the outside air temperature is >(1)°C. above the return air temperature then the thermal wheel shall run at full speed, otherwise it shall vary between closed and full speed.

The frost valve shall be modulated between closed and fully open based on the outside air temperature such that at -5°C. the valve is fully open and at 5°C. the valve is closed. The open position of the valve shall however be overridden towards closed if the off frost Coil Temperature is >(6)°C.

Fan Speed Control

The supply and extract fans shall run at a fixed speed determined during commissioning.

Fire Mode

In a fire mode the AHU shall shut down through hardwired interlocks, with the dampers and valves closed. The valves shall however continue to operate for stage 1 frost protection, valve exercise and water quality routines.

Fan selection

The system is provided with duty standby supply and extract fans. These fans shall duty rotate on a weekly basis and if in a fault mode. At the BMS graphic the user shall be able to select either fan as duty or by use of the fan software HOA switch is preventable fan from running at all.

AHU Maintenance Strategy

The BMS specialist shall provide and configure software for an AHU maintenance strategy program. When this maintenance strategy is active the AHU shall be enabled, and the supply air set point shall be set to (30)°C. The system shall run for (30) minutes and then return to auto for (5) minutes. The supply air set point shall be set to (15)°C and shall run for a further (30) minutes and then return to auto for (5) minutes and then revert to off. An automatic report shall be generated that describes the operation of the AHU in this test routine.

The maintenance fail alarm shall be active if during the cooling mode the supply air temperature has not fallen below (16)°C. or in the heating mode risen above (25)°C.

The maintenance fail alarm shall be active if during the cooling mode the air temperature across the cooling coil has not fallen by >(5)°C.

The maintenance fail alarm shall be active if during the heating mode the air temperature across the heating coils has not risen by >(5)°C.

The routine is initiated manually by the FM team.

Sensor Faults

The control sensors shall be monitored and if out of range then alternative sensors shall be utilised for the control strategy.

- If the supply air temperature is out of range then the AHU thermal control shall be from the return air temperature sensor with a set point of (21)°C
- If the outside air temperature is out of range then the frost coil shall be controlled to a nominal (6)°C. from the frost leaving coil temperature sensor.

System Alarms

The BMS shall monitor the system for status and raise alarms on system mismatch with a suitable grace time.

The critical alarms, which shall be indicated on the AHU graphic and in the alarm list, illuminate the AHU fault lamp and be issued as an email shall be:

- Supply fan failing to run when commanded on
- Extract fan failing to run when commanded on
- Frost stat trip after 3 times
- Supply Damper failed to open
- Extract Damper failed to open
- High pressure cut out active
- Low pressure cut out active.

The maintenance alarms, which shall be indicated on the AHU graphic and when in the alarm list shall be:

- Filter dirty
- Supply air temperature ± 5°C. from set point
- Extract air temperature ± 5°C. from set point
- Control Valve manually overridden
- Fan speed manually overridden
- Sensor out of range.

Trend Logs

The BMS specialist shall set the following trends to be logged:

- Fan change of state - running/not running
- Supply fan speed
- Extract fan speed
- Outside air temperature
- Supply air set point
- Supply air measured temperature
- Extract air temperature set point
- Extract air measured temperature
- Off Frost Coil Temperature
- Off thermal wheel temperature
- Off Cooling coil temperature

- Heating and cooling valve positions (BMS output)
- Cooling & Heating valve positions (BMS output)
- Thermal wheel exhaust air temperature
- AHU LTHW entering water temperature
- AHU LTHW leaving water temperature
- AHU LTHW flow rate
- AHU CHW entry water temperature
- AHU CHW leaving water temperature
- AHU CHW flow rate
- Accumulative heat energy
- Instantaneous heat energy
- Accumulative cooling energy
- Instantaneous cooling energy.

These values shall be set for (15) minute intervals however, the user shall be to adjust these to any reasonable value as a minimum 30 seconds for investigative maintenance routines.

3.8 Office Accessible Toilet Ventilation

The office accessible toilet ventilation system is mounted on level 4.

The AHU comprises run and standby supply fan run and standby extract fan with isolation damper filters and heating coil is enabled if the toilet time clock is active OR if any of the office AHUs are running in the occupancy mode. The AHUs provide air at constant volume and variable temperature to maintain the required return air temperature set point.

When the AHU is off the valves are closed and the isolation dampers shut. In stage 1 frost condition the heating valve is modulated to maintain a local temperature of (20)^{o}C. In a fire mode the AHU is shut down through hardwired interlocks.

3.8.1 Controls Hardware

The BMS specialist shall provide a common form 2B type 2 power panel for the AHU and separately a form 1 panels that contains the control equipment.

The power section shall include an MID electrical meter with the display mounted on the fascia of the panel and connected via Modbus to the sitewide BMS. The AHU shall in addition have an MID approved electrical meter that shall be connected to the site wide EMS and forms part of the tenant billing and energy monitoring strategy.

The AHU fans are inverter controlled with inverters provided by the BMS specialist complete with hardwired and BACnet interface to the BMS controllers. The BMS specialist shall provide inverters IP 54 enclosures or alternatively mount these within the BMS power board power section.

The BMS specialist shall provide all power and controls wiring from the BMS provided controls and power panel to the inverters, the power cabling shall include an on load isolator with auxiliary contacts wired to the inverter enable circuit.

The BMS specialist shall provide all controls instruments and actuators and the 2 port PICV modulating control valves. The BMS specialist shall provide actuators for the supply and exhaust dampers. The BMS specialist shall provide all interconnecting cabling between the controls instruments and actuators and the BMS provided control panel.

The AHU is controlled by the BMS supplied DDC web enabled controller that communicates to the sitewide BMS via the converged network utilising BACnet/IP. The controller is held within the non-door interlocked control panel and is provided with a backlit colour display mounted on the fascia of the panel. The display shall be protected by a clear Perspex hinged cover plate

The BMS specialist shall provide hardwired safety interlocks between the fire alarm system, the damper end switches, and the auto reset frost stat. If any of these are in a fault mode the supply fan shall shut down through hardwired interlocking. The supply fan enable shall be hardwired interlocked with the airflow proving from the other supply fan such that only one can run at a time.

The BMS specialist shall provide hardwired safety interlocks for the extract system between the fire alarm system and damper end switch. If any of these are fault mode the extract fan shall shut down through hardwired interlocking. The extract fan enable shall be hardwired interlocked with the airflow proving from the other extract fan such that only one can run at a time.

The BMS specialist shall provide all software interlocking that would include hardwired interlocks, AHU software HOA switch, fan software HOA switch and no existing fan alarm. If any of these are in a fault mode then the AHU shall not be able to operate. Where software switches are provided if these are in the “HAND” mode then the fan or AHU shall be able to run assuming all hardwired interlocks are healthy. The system shall revert to auto after 4 hours, this time limit is only adjustable in software configuration mode.

The supply and extract fans shall be software interlocked with suitable time delays such that the extract can run without the supply, but the supply cannot run without the extract.

The run and standby fans shall duty rotate on a weekly basis and in a fault mode.

The fascia of the control section shall include control circuit healthy lamp, a system running lamp, a fault lamp and a reset button.

The plant status and plant HOA switches shall form part of a GUI displayed on an android style backlit colour display panel. This panel shall be mounted on the fascia of the control enclosure shall act as a browser to the embedded graphics held within main plant controller. The plant graphic, which may be the same as the graphic displayed on the BMS head end supervisor, shall be held within the AHU controller and accessed via this web browser from the display panel. The user shall be able to manipulate and review the plant status directly through this graphic with a user specific password. Any user shall be able to view the plant status directly through this graphic without any password required. The BMS specialist shall configure for each controller 3 users. User 1 shall have view only access, user 2 shall have the same right as user 1 and be able to access the plant and fan HOA switch, whilst user 3 can access all information using their unique password.

The inverters require a manual speed control when operating in a manual mode. This manual speed control limited to a minimum of 20 Hz shall be available to the user through a user adjustable GUI knob displayed on the BMS head end supervisor and at the AHU control panel.

The major alarms when active shall illuminate the panel alarm lamp. When the alarm reset button is operated ALL existing alarms within this local controller shall be cleared.

The BMS specialist shall provide 24 Volt powered MID approved heat meters for each AHU measuring the total heating and the total cooling energy. These meters shall be connected BACnet/MSTP to the sitewide EMS and powered from the AHU control panel. The meter shall display on each AHU graphic the water entering and leaving temperatures, the water flow rates and the instantaneous energy. Separate metering graphic shall be provided for the sitewide services as part of the energy management system.

3.8.2 Operation

The AHU shall be enabled whenever the office toilet time clock is active, or if any office AHU is running in occupancy or if the AHU BMS software HOA switch is in the hand position. The AHU shall run until the end of occupancy, or if the office AHU stops (whichever is the later) or for (4) hours when in the hand mode when it shall return to auto.

When the AHU is required to run the supply and extract isolation dampers shall be opened and when proven through hardwired interlocks the duty supply and duty extract fan shall be enabled assuming all interlocks are healthy.

Hardwired Interlocks
The supply fan hardwired interlocks include: damper isolation switch open, frost stat healthy, other fan not running, fire alarm healthy. The software interlock (with suitable time delays) shall include hardwired interlocks, no existing fan alarm, extract fan proven running, no existing frost alarm, low outside air temperature hold off not active, and the AHU software switch in either hand or auto, the duty supply fan software switch in hand or auto.

The extract fan hardwired interlocks include: damper isolation switch open, other extract fan not running, fire alarm healthy. The software interlock (with suitable time delays) shall include hardwired interlocks, no existing fan alarm, and the AHU software switch in either hand or auto, the duty extract fan software switch in hand or auto.

Low Outside Temperature Hold Off
If the AHU is required to start when the outside air temperature is <(5)^{o}C then in the first instance the heating valve shall be opened fully and the appropriate heating pumps enabled, which in turn shall enable the heating system. The AHU shall be held off until the LTHW water temperature leaving the AHU is >(40)^{o}C. for >(5) minutes.

Frost Stat Trip
If the AHU has tripped on frost alarm then the frost valve shall be driven fully open, the supply section shut down. The supply section shall restart in the outside air low temperature condition once the auto reset frost stat has reset. If this fault occurs (3) times in (24) hours supply section shall only restart when the frost fault is cleared at either the BMS supervisor or the control panel display screen, or the control panel alarm reset button is operated.

Stage 1 Frost Protection
If the plant is off and the outside air temperature is in stage 1 frost protection <(3)^{o}C. then the heating valve modulated to maintain a local temperature of (20)^{o}C.

Fan Motor Fault
The BMS shall monitor the fan status both via a fan differential pressure switch and individually via the BACnet connection to each fan inverter.

If the duty fan has been called to run and the differential pressure switch has not made after a suitable grace time then the fan set shall duty rotate and the new duty enabled in the normal manner. A BMS alarm shall be raised for the failed fan.

If both duty supply fans fail then the supply section of the AHU shall be shut down with the dampers shut and the valves off. The extract shall continue to operate normally.

If both duty extract fans have failed then the supply and extract sections of the AHU shall be shut down in the normal manner.

Plant Off State
When the AHU is off the supply and extract isolation dampers shall be closed, the valves are closed, and the fan is off.

Valve Exercise Routine
The valves shall be opened and closed fully in one cycle, once per day at 05.00.

Water Flush Routine

The LTHW water flush routine shall be initiated from the LTHW control panel and sent as a command to each AHU. When this command is active and if the AHU is off and the valve has not been more than (50%) open in the previous (18) hours the heating valves shall be opened fully until the command is removed or the AHU is required to operate. Generally this shall be once per day for (1) hour.

Neither of these routines will be active in a stage 1 frost condition.

System Thermal Control

When the AHU is running in normal occupancy the supply air set point shall be achieved by modulation of the heating valve with a PI loop.

The supply air set point shall have two user selectable units, a toggle switch shall be provided on the BMS supervisor and at the AHU display panel to select either control strategy. This shall be either a constant temperature that is adjustable at the head end and the AHU display screen between limits (16 to 25)^{o}C OR a variable temperature that is rescheduled between limits (18 to 28)^{o}C. to maintain the return air set point. The nominal return air temperature set point is (23)^{o}C. that is user adjustable by a level 2 user (± 3)^{o}C, that reverts to 0 offset at midnight . A level 3 user can permanently change this nominal set point (± 3)^{o}C.

The return air set point shall have a dead band of (± 1)^{o}C. in which no resetting supply temperature shall take place.

Fan Speed Control

The supply and extract fans shall run at a fixed speed determined during commissioning.

Fire Mode

In a fire mode the AHU shall shut down through hardwired interlocks, with the dampers and valve closed. The valve shall however continue to operate for stage 1 frost protection, valve exercise and water quality routines.

Fan Selection

The system is provided with duty standby supply and extract fans. These fans shall duty rotate on a weekly basis and if in a fault mode. At the BMS graphic the user shall be able to select either fan as duty or by use of the fan software HOA switch is preventable fan from running at all.

AHU Maintenance Strategy

The BMS specialist shall provide and configure software for an AHU maintenance strategy program. When this maintenance strategy is active the AHU shall be enabled, and the supply air set point shall be set to (30)^{o}C. The system shall run for (30) minutes and then return to auto for (5) minutes.

The maintenance fail alarm shall be active if during the heating mode the air temperature across the heating coils has not risen by >(5)^{o}C.

The routine is initiated manually by the FM team.

Sensor Faults

The control sensors shall be monitored and if out of range then alternative sensors shall be utilised for the control strategy.

- If the supply air temperature is out of range then the AHU thermal control shall be from the return air temperature sensor with a set point of (21)^{o}C.

System Alarms

The BMS shall monitor the system for status and raise alarms on system mismatch with a suitable grace time.

The critical alarms, which shall be indicated on the AHU graphic and in the alarm list, illuminate the AHU fault lamp and be issued as an email shall be:

- Supply fan failing to run when commanded on
- Extract fan failing to run when commanded on
- Frost stat trip after 3 times
- Supply Damper failed to open
- Extract Damper failed to open
- High pressure cut out active
- Low pressure cut out active.

The maintenance alarms, which shall be indicated on the AHU graphic and when in the alarm list shall be:

- Filter dirty
- Supply air temperature ± 5ºC. from set point
- Extract air temperature ± 5ºC. from set point
- Control Valve manually overridden
- Fan speed manually overridden
- Sensor out of range.

Trend Logs

The BMS specialist shall set the following trends to be logged:

- Fan change of state - running/not running
- Supply fan speed
- Extract fan speed
- Outside air temperature
- Supply air set point
- Supply air measured temperature
- Extract air temperature set point
- Extract air measured temperature
- Heating valve positions (BMS output)
- AHU LTHW entering water temperature
- AHU LTHW leaving water temperature
- AHU LTHW flow rate
- AHU CHW entry water temperature
- AHU CHW leaving water temperature
- Accumulative heat energy
- Instantaneous heat energy.

These values shall be set for (15) minute intervals however, the user shall be to adjust these to any reasonable value as a minimum 30 seconds for investigative maintenance routines.

3.9 Basement Ventilation

The basement is ventilated by a duty standby supply and extract fans mounted in the subbasement.

The system comprises run and standby supply fan run and standby extract fan with isolation damper filters and heating coil is enabled if the basement time clock is active. The system provides air at constant volume and variable temperature.

When the AHU is off the valves are closed and the isolation dampers shut. In stage 1 frost condition the heating valve is modulated to maintain a local temperature of (20)^{o}C. In a fire mode the AHU is shut down through hardwired interlocks.

Within the basement local rooms are provided with fan coil units control for return air temperature sensors to maintain a local room set point.

3.9.1 Controls Hardware

The BMS specialist shall provide a common form 2B type 2 power panel for the system and separately a form 1 panels that contains the control equipment.

The power section shall include an MID electrical meter with the display mounted on the fascia of the panel and connected via Modbus to the sitewide BMS. The fan system shall in addition have an MID approved electrical meter that shall be connected to the site wide EMS and forms part of the tenant billing and energy monitoring strategy.

The fans are inverter controlled with inverters provided by the BMS specialist complete with hardwired and BACnet interface to the BMS controllers. The BMS specialist shall provide inverters IP 54 enclosures or alternatively mount these within the BMS power board power section.

The BMS specialist shall provide all power and controls wiring from the BMS provided controls and power panel to the inverters, the power cabling shall include an on load isolator with auxiliary contacts wired to the inverter enable circuit.

The BMS specialist shall provide all controls instruments and actuators and the 2 port PICV modulating control valves. The BMS specialist shall provide actuators for the supply and exhaust dampers. The BMS specialist shall provide all interconnecting cabling between the controls instruments and actuators and the BMS provided control panel.

The BMS specialist shall provide manual reset high and low-pressure switches.

The AHU is controlled by the BMS supplied DDC web enabled controller that communicates to the sitewide BMS via the converged network utilising BACnet/IP. The controller is held within the non-door interlocked control panel and is provided with a backlit colour display mounted on the fascia of the panel. The display shall be protected by a clear Perspex hinged cover plate

The BMS specialist shall provide hardwired safety interlocks between the fire alarm system, the damper end switches, and the auto reset frost stat. If any of these are in a fault mode the supply fan shall shut down through hardwired interlocking. The supply fan enable shall be hardwired interlocked with the airflow proving from the other supply fan such that only one can run at a time.

The BMS specialist shall provide hardwired safety interlocks for the extract system between the fire alarm system and damper end switch. If any of these are fault mode the extract fan shall shut down through hardwired interlocking. The extract fan enable shall be hardwired interlocked with the airflow proving from the other extract fan such that only one can run at a time.

The BMS specialist shall provide all software interlocking that would include hardwired interlocks, AHU software HOA switch, fan software HOA switch and no existing fan alarm. If any of these are in a fault mode then the AHU shall not be able to operate. Where software switches are provided if these are in the “HAND” mode then the fan or AHU shall be able to run

assuming all hardwired interlocks are healthy. The system shall revert to auto after 4 hours, this time limit is only adjustable in software configuration mode.

The run and standby fans shall duty rotate on a weekly basis and in a fault mode.

The fascia of the control section shall include control circuit healthy lamp, a system running lamp, a fault lamp and a reset button.

The plant status and plant HOA switches shall form part of a GUI displayed on an android style backlit colour display panel. This panel shall be mounted on the fascia of the control enclosure shall act as a browser to the embedded graphics held within main plant controller. The plant graphic, which may be the same as the graphic displayed on the BMS head end supervisor, shall be held within the AHU controller and accessed via this web browser from the display panel. The user shall be able to manipulate and review the plant status directly through this graphic with a user specific password. Any user shall be able to view the plant status directly through this graphic without any password required. The BMS specialist shall configure for each controller 3 users. User 1 shall have view only access, user 2 shall have the same right as user 1 and be able to access the plant and fan HOA switch, whilst user 3 can access all information using their unique password.

The inverters require a manual speed control when operating in a manual mode. This manual speed control limited to a minimum of 20 Hz shall be available to the user through a user adjustable GUI knob displayed on the BMS head end supervisor and at the AHU control panel.

The major alarms when active shall illuminate the panel alarm lamp. When the alarm reset button is operated ALL existing alarms within this local controller shall be cleared.

The BMS specialist shall provide 24 Volt powered MID approved heat meters for each AHU measuring the total heating and the total cooling energy. These meters shall be connected BACnet/MSTP to the sitewide EMS and powered from the AHU control panel. The meter shall display on each AHU graphic the water entering and leaving temperatures, the water flow rates and the instantaneous energy. Separate metering graphic shall be provided for the sitewide services as part of the energy management system.

3.9.2 Operation

The system shall be enabled whenever the basement time clock is active or if the system BMS software HOA switch is in the hand position. The system shall run until the end of occupancy, or for (4) hours when in the hand mode when it shall return to auto.

When the system is required to run the supply and extract isolation dampers shall be opened and when proven through hardwired interlocks the duty supply and duty extract fan shall be enabled assuming all interlocks are healthy.

Hardwired Interlocks

The supply fan hardwired interlocks include: damper isolation switch open, frost stat healthy, other fan not running, fire alarm healthy high and low pressure switch healthy.. The software interlock (with suitable time delays) shall include hardwired interlocks, no existing fan alarm, extract fan proven running, no existing frost alarm, low outside air temperature hold off not active, and the AHU software switch in either hand or auto, the duty supply fan software switch in hand or auto.

The extract fan hardwired interlocks include: damper isolation switch open, other extract fan not running, fire alarm healthy, high and low pressure switch healthy. The software interlock (with suitable time delays) shall include hardwired interlocks, no existing fan alarm, and the AHU software switch in either hand or auto, the duty extract fan software switch in hand or auto.

Low Outside Temperature Hold Off

If the AHU is required to start when the outside air temperature is <(5)^{o}C then in the first instance the heating valve shall be opened fully and the appropriate heating pumps enabled, which in turn shall enable the heating system. The AHU shall be held off until the LTHW water temperature leaving the heating coil is >(40)^{o}C. for >(5) minutes.

Frost Stat Trip

If the supply system has tripped on frost alarm then the frost valve shall be driven fully open, the supply section shut down. The supply section shall restart in the outside air low temperature condition once the auto reset frost stat has reset. If this fault occurs (3) times in (24) hours supply section shall only restart when the frost fault is cleared at either the BMS supervisor or the control panel display screen, or the control panel alarm reset button is operated.

Stage 1 Frost Protection

If the plant is off and the outside air temperature is in stage 1 frost protection <(3)ºC. then the heating valve modulated to maintain a local temperature of (20)ºC.

Fan Motor Fault

The BMS shall monitor the fan status both via a fan differential pressure switch and individually via the BACnet connection to each fan inverter.

If the duty fan has been called to run and the differential pressure switch has not made after a suitable grace time then the fan set shall duty rotate and the new duty enabled in the normal manner. A BMS alarm shall be raised for the failed fan.

If both duty supply fans fail then the supply section shall be shut down with the dampers shut and the valves off. The extract shall continue to operate normally.

If both duty extract fans fail then the extract section shall be shut down with the dampers shut and the valves off. The supply shall continue to operate normally.

Plant Off State

When the system is off the supply and extract isolation dampers shall be closed, the valves are closed, and the fans are off.

Valve Exercise Routine

The valves shall be opened and closed fully in one cycle, once per day at 05.00.

Water Flush Routine

The LTHW water flush routine shall be initiated from the LTHW control panel and sent as a command to each AHU. When this command is active and if the system is off and the valve has not been more than (50%) open in the previous (18) hours the heating valve shall be opened fully until the command is removed or the system is required to operate. Generally this shall be once per day for (1) hour.

Neither of these routines will be active in a stage 1 frost condition.

System Thermal Control

When the system is running in normal occupancy the supply air set point shall be achieved by modulation of the heating valve with a PI loop.

The supply air set point shall have two user selectable units, a toggle switch shall be provided on the BMS supervisor and at the system display panel to select either control strategy. This shall be either a constant temperature that is adjustable at the head end and the system display screen between limits (10 to 25)ºC OR a variable temperature that is rescheduled between limits to an outside air temperature compensated set point (To 0ºC. Ts 20 – To 15ºC. Ts 15)ºC.

Fan Speed Control

The supply and extract fans shall run at a fixed speed determined during commissioning.

Fire Mode

In a fire mode the supply and extract fans shall shut down through hardwired interlocks, with the dampers and valve closed. The valve shall however continue to operate for stage 1 frost protection, valve exercise and water quality routines.

Fan selection

The system is provided with duty standby supply and extract fans. These fans shall duty rotate on a weekly basis and if in a fault mode. At the BMS graphic the user shall be able to select either fan as duty or by use of the fan software HOA switch is able to prevent any fan from running at all.

Sensor Faults

The control sensors shall be monitored and if out of range then alternative sensors shall be utilised for the control strategy.

- If the supply air temperature sensor is out of range then the heating valves shall be (50)% open.

System Alarms

The BMS shall monitor the system for status and raise alarms on system mismatch with a suitable grace time.

The critical alarms, which shall be indicated on the AHU graphic and in the alarm list, illuminate the AHU fault lamp and be issued as an email shall be:

- Supply fan failing to run when commanded on
- Extract fan failing to run when commanded on
- Frost stat trip after 3 times
- Supply Damper failed to open
- Extract Damper failed to open
- High pressure cut out active
- Low pressure cut out active.

The maintenance alarms, which shall be indicated on the AHU graphic and when in the alarm list shall be:

- Filter dirty
- Supply air temperature ± 5ºC. from set point
- Control Valve manually overridden
- Fan speed manually overridden
- Sensor out of range.

Trend Logs

The BMS specialist shall set the following trends to be logged:

- Fan change of state - running/not running
- Supply fan speed
- Extract fan speed
- Outside air temperature
- Supply air set point
- Supply air measured temperature
- Heating valve positions (BMS output)
- AHU LTHW entering water temperature
- AHU LTHW leaving water temperature
- AHU LTHW flow rate

- AHU CHW entry water temperature
- AHU CHW leaving water temperature
- Accumulative heat energy
- Instantaneous heat energy.

These values shall be set for (15) minute intervals however, the user shall be to adjust these to any reasonable value as a minimum 30 seconds for investigative maintenance routines.

3.10 Basement Fan Coil Units

The basement back of house spaces shall be provided with fan coil units that shall generally be provided and operate as described for the tenant offices.

The BMS specialist shall provide all controls instruments and actuators, controllers and necessary transformers and provide these to the fan coil unit manufacturer for off-site wiring.

The fan coil units shall operate to a fixed time clock and shall be enabled for low space temperature protection.

In low space temperature protection the fan coil unit shall run at full speed and the set point elevated whilst in normal operation the fan coils at normal speed with a PI control of the heating cooling valves with supply air temperature override to achieve room set point as measured at the return air temperature sensor.

The fan coil set points, maintenance routine, valve exercise, alarms, sensor values, trending and the like shall be as described for the office air conditioning system. Refer to section 3.4 for full technical details.

3.11 Basement Smoke Extract

The level 2 basement is provided with duty standby smoke extract and make up fan set. The system is normally off and only operates in a test or smoke exhaust mode.

3.11.1 Controls Hardware

The BMS specialist shall provide a form 3B type 2 control panel for each system with controls and power wiring to category 3 BS 8519. The power section shall be non-door interlocked with internally mounted door interlocked enclosures within which the MCBs shall be housed to serve the inverters. The panel shall include MID approved electrical meter connected to the sitewide EMS and a non-door interlocked control section that shall contain ELV services only. The controls transformer and MCBs shall be within the power section within a door interlocked enclosure.

The BMS specialist shall provide the fan inverters they shall be suitable for normal and fire operation. The smoke speed shall be commanded from the smoke control system and the inverter run at the fixed speeds programmed within the inverter via hardwired signals direct to programable inputs on the inverter.

The run and standby fan set shall be hardwired interlocked such that when one fan is running the other cannot run. The operation of the fans in a fire mode shall be through hardwired interlocking.

The control panel shall be form 1 non-door interlocked and shall contain the hardwired interlocking relays for the operation of the fans. All services within this panel shall be ELV only with the exception of the RCD protected twin socket unit that shall be mounted on the side wall between the power section and the control section. The control section shall contain the DDC controller that should be used for monitoring the system. For test purposes the fans shall be operated via the high-level interface. The system isolation damper shall open through hardwired interlocking when the fans are required to run either through hard input from the smoke damper control system or via a command from the DDC outstation during a test mode. The status of the smoke damper shall be made available to the smoke damper control system by interposing relays within

the BMS provided control panel. When the dampers are opened the fan shall run whenever commanded by the smoke control system.

The panel fascia shall include a Backlit colour display panel that shall be a web browser to the embedded graphics within the DDC controller.

The fans require a manual speed control when operating in a manual mode. This manual speed control limited to a minimum of 20 Hz shall be available to the user through a user adjustable GUI knob displayed on the BMS head end supervisor and at the fan control panel.

The smoke damper control system shall select the required fan speed and within the BMS panel these (4) speeds shall be hardwired to digital inputs on the inverter. The low and high pressure cut out switches shall form part of the fan safety circuit however, when the fans are running in smoke control these interlocks shall be overridden.

The status of the common fan and common fault for each fan set shall be monitored by the smoke control I/O module through interposing relays in the BMS control panel.

The inverters, power and control panel and any associated ATS require to be installed in a builder's provided 2 hour fire rated enclosure with intumescent ventilation grills. Alternatively this equipment shall be mounted outside of the space protected by the fans.

3.11.2 Operation

The supply and extract fans shall normally be off however these can be manually tested through a soft switch selectable at the BMS head end supervisor and the control panel display unit.

When the user selectable test switch (individual for the supply and extract system) is operated the isolation dampers shall be opened and when proven through hardwired interlock fan duty A shall be enabled assuming all other interlocks are healthy. The fan hardwired interlock include: fire normal, fan not required to run determined from the smoke control system, other fan not running, isolation damper proven open, high pressure cut out healthy, low pressure cut out healthy. Fan A shall run for a user selectable software time between (1-60) minutes when it shall stop, and standby fan B shall be enabled assuming all hardwired interlocks are healthy. At the end of the test the fans shall be stopped, and the isolation damper closed. If during this test mode the fire alarm becomes active then the fan set shall be stopped, the damper closed, and the system await for commands from the smoke damper control system.

In the smoke extract mode the command to run the fans shall be sent from the smoke control system through hardwired interlocks to the BMS control panel. The smoke control system shall call for the fans to run, select the fan speed and monitor the systems for status.

The smoke control system shall send commands to open the isolation dampers and when these are proven open the smoke control system shall send the command to run the fan at an appropriate speed. Whenever the fan is required to run fan A shall be enabled with fan B being held off by a delay on time in the fan enable circuit. This enable circuit includes the fan A proven running relay wired in series with the delay on time. If fan A fails and the timer has timed out then fan B is enabled through this hardwired interlock and remains running until the smoke control system sends the stop signal for the fan set. In that instance fan A returns to being the duty even if it has previously failed. It should be noted that fan B will then restart as soon as the timer has timed out as fan a will have failed to run.

System Alarms

The BMS shall monitor the system for status and raise alarms on system mismatch with a suitable grace time.

The critical alarms, which shall be indicated on the fan graphic and in the alarm list, illuminate the control lamp fault lamp and be issued as an email shall be:

- Fan Inverter Fault

- Loss of power at the control panel
- Supply fan failing to run when commanded on
- Extract fan failing to run when commanded on
- Supply Damper failed to open
- Extract Damper failed to open
- High pressure cut out active
- Low pressure cut out active.

Trend Logs

The BMS specialist shall set the following trends to be logged:

- Fan change of state - running/not running
- Supply fan speed. Via inverter HLI feedback
- Extract fan speed. Via inverter HLI feedback.

These values shall be set for (15) minute intervals however, the user shall be to adjust these to any reasonable value as a minimum 30 seconds for investigative maintenance routines.

3.12 Bin Store

The bin store basement is ventilated by a duty standby extract fan set that provides air at constant volume. The system runs to a fixed time clock and shuts down through hardwired slot in a fire mode.

The fans duty standby and duty rotate on a weekly basis and if in a fault mode.

3.12.1 Controls Hardware

The BMS specialist shall provide a common form 2B type 2 power panel for the system and separately a form 1 panel that contains the control equipment.

The power section shall include an MID electrical meter with the display mounted on the fascia of the panel and connected via Modbus to the sitewide BMS. The fan system shall in addition have an MID approved electrical meter that shall be connected to the site wide EMS and forms part of the tenant billing and energy monitoring strategy.

The fans are inverter controlled with inverters provided by the BMS specialist complete with hardwired and BACnet interface to the BMS controllers. The BMS specialist shall provide inverters IP 54 enclosures or alternatively mount these within the BMS power board power section.

The BMS specialist shall provide all power and controls wiring from the BMS provided controls and power panel to the inverters, the power cabling shall include an on load isolator with auxiliary contacts wired to the inverter enable circuit.

The BMS specialist shall provide all controls instruments and actuators. The BMS specialist shall provide all interconnecting cabling between the controls instruments and actuators and the BMS provided control panel.

The BMS specialist shall provide manual reset high and low-pressure switches.

The fan set is controlled by the BMS supplied DDC web enabled controller that communicates to the sitewide BMS via the converged network utilising BACnet/IP. The controller is held within the non-door interlocked control panel and is provided with a backlit colour display mounted on the fascia of the panel. The display shall be protected by a clear Perspex hinged cover plate

The BMS specialist shall provide hardwired safety interlocks for the extract system with the fire alarm system the extract fan shall shut down through hardwired interlocking in a fire mode. The extract fan enable shall be hardwired interlocked with the airflow proving from the other extract fan such that only one can run at a time.

The BMS specialist shall provide all software interlocking that would include hardwired interlocks, system software HOA switch, fan software HOA switch and no existing fan alarm. If any of these are in a fault mode then the equipment shall not be able to operate. Where software switches are provided if these are in the "HAND" mode then the fan or system shall be able to run assuming all hardwired interlocks are healthy. The system shall revert to auto after 4 hours, this time limit is only adjustable in software configuration mode.

The run and standby fans shall duty rotate on a weekly basis and in a fault mode.

The fascia of the control section shall include control circuit healthy lamp, a system running lamp, a fault lamp and a reset button.

The plant status and plant HOA switches shall form part of a GUI displayed on an android style backlit colour display panel. This panel shall be mounted on the fascia of the control enclosure shall act as a browser to the embedded graphics held within main plant controller. The plant graphic, which may be the same as the graphic displayed on the BMS head end supervisor, shall be held within the system controller and accessed via this web browser from the display panel. The user shall be able to manipulate and review the plant status directly through this graphic with a user specific password. Any user shall be able to view the plant status directly through this graphic without any password required. The BMS specialist shall configure for each controller 3 users. User 1 shall have view only access, user 2 shall have the same right as user 1 and be able to access the plant and fan HOA switch, whilst user 3 can access all information using their unique password.

The inverters require a manual speed control when operating in a manual mode. This manual speed control limited to a minimum of 20 Hz shall be available to the user through a user adjustable GUI knob displayed on the BMS head end supervisor and at the AHU control panel.

The major alarms when active shall illuminate the panel alarm lamp. When the alarm reset button is operated ALL existing alarms within this local controller shall be cleared.

3.12.2 Operation

The system shall be enabled whenever the bin store or basement time clock is active or if the system BMS software HOA switch is in the hand position. The system shall run until the end of occupancy, or for (4) hours when in the hand mode when it shall return to auto.
When the system is required to run the duty extract fan shall be enabled assuming all interlocks are healthy.

Hardwired Interlocks

The extract fan hardwired interlocks include: other extract fan not running, fire alarm healthy, high and low pressure switch healthy. The software interlock (with suitable time delays) shall include hardwired interlocks, no existing fan alarm, the system software switch in either hand or auto, the duty extract fan software switch in hand or auto.

Fan Motor Fault

The BMS shall monitor the fan status both via an inverter running feedback signal and via the BACnet connection to each fan inverter.

If the duty fan has been called to run and air flow has not made after a suitable grace time then the fan set shall duty rotate and the new duty enabled in the normal manner. A BMS alarm shall be raised for the failed fan.

Fan Speed Control

The extract fans shall run at a fixed speed determined during commissioning.

Fire Mode

In a fire mode the extract fans shall shut down through hardwired interlocks.

Fan selection

The system is provided with duty standby extract fans. These fans shall duty rotate on a weekly basis and if in a fault mode. At the BMS graphic the user shall be able to select either fan as duty or by use of the fan software HOA switch is able to prevent any fan from running at all.

System Alarms

The BMS shall monitor the system for status and raise alarms on system mismatch with a suitable grace time.

The critical alarms, which shall be indicated on the AHU graphic and in the alarm list, illuminate the AHU fault lamp and be issued as an email shall be:

- Extract fan failing to run when commanded on
- High pressure cut out active
- Low pressure cut out active.

The maintenance alarms, which shall be indicated on the AHU graphic and when in the alarm list shall be:

- Fan speed manually overridden.

Trend Logs

The BMS specialist shall set the following trends to be logged:

- Fan change of state - running/not running
- Extract fan speed.

These values shall be set for (15) minute intervals however, the user shall be to adjust these to any reasonable value as a minimum 30 seconds for investigative maintenance routines.

3.13 Bin Store Smoke Extract

The bin store is provided with duty standby smoke extract fan set. The system is normally off and only operates in a test or smoke exhaust mode.

3.13.1 Controls Hardware

The BMS specialist shall provide a form 3B type 2 control panel for each system with controls and power wiring to category 3 BS 8519. The power section shall be non-door interlocked with internally mounted door interlocked enclosures within which the MCBs shall be housed to serve the inverters. The panel shall include MID approved electrical meter connected to the sitewide EMS and a non-door interlocked control section that shall contain ELV services only. The controls transformer and MCBs shall be within the power section within a door interlocked enclosure.

The BMS specialist shall provide the fan inverters they shall be suitable for normal and fire operation. The smoke speed shall be commanded from the smoke control system and the inverter run at the fixed speeds programmed within the inverter via hardwired signals direct to programable inputs on the inverter.

The run and standby fan set shall be hardwired interlocked such that when one fan is running the other cannot run. The operation of the fans in a fire mode shall be through hardwired interlocking.

The control panel shall be form 1 non-door interlocked and shall contain the hardwired interlocking relays for the operation of the fans. All services within this panel shall be ELV only with the exception of the RCD protected twin socket unit that shall be mounted on the side wall between the power section and the control section. The control section shall contain the DDC

controller that should be used for monitoring the system. For test purposes the fans shall be operated via the high-level interface. The system isolation damper shall open through hardwired interlocking when the fans are required to run either through hard input from the smoke damper control system or via a command from the DDC outstation during a test mode. The status of the smoke damper shall be made available to the smoke damper control system by interposing relays within the BMS provided control panel. When the dampers are opened the fan shall run whenever commanded by the smoke control system.

The panel fascia shall include a Backlit colour display panel that shall be a web browser to the embedded graphics within the DDC controller.

The fans require a manual speed control when operating in a manual mode. This manual speed control limited to a minimum of 20 Hz shall be available to the user through a user adjustable GUI knob displayed on the BMS head end supervisor and at the fan control panel.

The smoke damper control system shall select the required fan speed and within the BMS panel these (2) speeds shall be hardwired to digital inputs on the inverter. The low and high pressure cut out switches shall form part of the fan safety circuit however, when the fans are running in smoke control these interlocks shall be overridden.

The status of the common fan and common fault for each fan set shall be monitored by the smoke control I/O module through interposing relays in the BMS control panel.

The inverters, power and control panel and any associated ATS require to be installed in a builder's provided 2 hour fire rated enclosure with intumescent ventilation grills. Alternatively this equipment shall be mounted outside of the space protected by the fans.

3.13.2 Operation

The extract fans shall normally be off however these can be manually tested through a soft switch selectable at the BMS head end supervisor and the control panel display unit.

When the user selectable test switch is operated the isolation dampers shall be opened and when proven through hardwired interlock fan duty A shall be enabled assuming all other interlocks are healthy. The fan hardwired interlock include: fire normal, fan not required to run determined from the smoke control system, other fan not running, isolation damper proven open, high pressure cut out healthy, low pressure cut out healthy. Fan A shall run for a user selectable software time between (1-60) minutes when it shall stop, and standby fan B shall be enabled assuming all hardwired interlocks are healthy. At the end of the test the fans shall be stopped, and the isolation damper closed. If during this test mode the fire alarm becomes active then the fan set shall be stopped, the damper closed, and the system await for commands from the smoke damper control system.

In the smoke extract mode the command to run the fans shall be sent from the smoke control system through hardwired interlocks to the BMS control panel. The smoke control system shall call for the fans to run, select the fan speed and monitor the systems for status.

The smoke control system shall send commands to open the isolation dampers and when these are proven open the smoke control system shall send the command to run the fan at an appropriate speed. Whenever the fan is required to run fan A shall be enabled with fan B being held off by a delay on time in the fan enable circuit. This enable circuit includes the fan A proven running relay wired in series with the delay on time. If fan A fails and the timer has timed out then fan B is enabled through this hardwired interlock and remains running until the smoke control system sends the stop signal for the fan set. In that instance fan A returns to being the duty even if it has previously failed. It should be noted that fan B will then restart as soon as the timer has timed out as fan a will have failed to run.

System Alarms

The BMS shall monitor the system for status and raise alarms on system mismatch with a suitable grace time.

The critical alarms, which shall be indicated on the fan graphic and in the alarm list, illuminate the control lamp fault lamp and be issued as an email shall be:

- Fan Inverter Fault
- Loss of power at the control panel
- Extract fan failing to run when commanded on
- Inlet Damper failed to open
- Exhaust Damper failed to open
- High pressure cut out active
- Low pressure cut out active.

Trend Logs

The BMS specialist shall set the following trends to be logged:

- Fan change of state - running/not running
- Supply fan speed. Via inverter HLI feedback
- Extract fan speed. Via inverter HLI feedback.

These values shall be set for (15) minute intervals however, the user shall be to adjust these to any reasonable value as a minimum 30 seconds for investigative maintenance routines.

3.14 Reception Ventilation

The reception area shall be ventilated by a packaged MVHR unit with duct mounted reheater. The unit is enabled whenever the reception are time clock is active or if any office space is in occupancy (any office AHU proven running).

Within the space heating is provided by door curtains.

3.14.1 Controls Hardware

The MEP specialist shall provide the MVHR complete with integral motor protection and fan speed selection. The unit shall include summer/winter bypass damper and ELV connections for remote control and monitoring.

The MEP specialist shall provide the door curtains with integral fan control and ELV connections for remote enable and monitoring.

The MVHR is controlled by the BMS supplied DDC web enabled controller that communicates to the sitewide BMS via the converged network utilising BACnet/IP. The controller is held within the non-door interlocked control panel and is provided with a backlit colour display mounted on the fascia of the panel. The BMS specialist shall provide the 2 port PICV modulating valves and associated actuators temperature sensors.

The over door curtains are enabled controlled by the BMS supplied DDC web enabled controller that money part of a central panel alternatively the BMS specialist may provide fan coil type controllers for each unit network these together.

The BMS specialist shall provide wall mounted temperature sensors and wire these back to the appropriate controller

The BMS specialist shall provide the hardwired safety interlock to the fire alarm system and interfaces to the MVHR.

The BMS specialist shall provide all software interlocking that would include hardwired interlocks, MVHR software HOA switch and no existing fan alarm. If any of these are in a fault mode then the MVHR shall not be able to operate. Where software

switches are provided if these are in the “HAND” mode then the MVHR shall be able to run assuming all hardwired interlocks are healthy. The system shall revert to auto after 4 hours, this time limit is only adjustable in software configuration mode.

The plant status and plant HOA switches shall form part of a GUI displayed on an android style backlit colour display panel. This panel shall be mounted on the fascia of the control enclosure shall act as a browser to the embedded graphics held within main plant controller. The plant graphic, which may be the same as the graphic displayed on the BMS head end supervisor, shall be held within the AHU controller and accessed via this web browser from the display panel. The user shall be able to manipulate and review the plant status directly through this graphic with a user specific password. Any user shall be able to view the plant status directly through this graphic without any password required. The BMS specialist shall configure for each controller 3 users. User 1 shall have view only access, user 2 shall have the same right as user 1 and be able to access the plant and fan HOA switch, whilst user 3 can access all information using their unique password.

The major alarms when active shall illuminate the panel alarm lamp. When the alarm reset button is operated ALL existing alarms within this local controller shall be cleared.

3.14.2 Operation

The MVHR shall be enabled whenever the reception time clock is active, or if any office AHU is running in normal occupancy mode, or if the MVHR BMS software HOA switch is in the hand position. The MVHR shall run until the end of occupancy, or for (4) hours when in the hand mode when it shall return to auto.

When the MVHR is required to run the unit shall be enabled assuming all interlocks are healthy.

The duct mounted heating coil shall be modulated to maintain a supply air temperature of (21)^{o}C. that is adjustable at the BMS head end supervisor and at the local control enclosure display screen (± 3)^{o}C. this value shall revert to 0 offset at midnight however a level 3 user can permanently adjust the set point (± 3)^{o}C.

The valve shall fully open and close on initial start-up and shall open during the plant water flush routine.

Hardwired Interlocks

The MVHR shall be hardwired interlocked with the fire alarm system and only run when the system is healthy. The software interlock (with suitable time delays) shall include hardwired interlocks, no existing fan alarm and the MVHR software switch in either hand or auto.

Motor Fault

The BMS shall monitor the unit status both via a fan differential pressure switch and through a volt free contact on the unit controller.

If the fan has been called to run and either differential pressure switch has not made after a suitable grace time then the unit shall shut down and an alarm raised.

If a fault is detected from the fan controller an alarm shall be raised.

Fan Speed Control

The supply and extract fans shall run at a fixed speed determined during commissioning.

Fire Mode

In a fire mode the unit shall shut down through hardwired interlock.

System Alarms

The BMS shall monitor the system for status and raise alarms on system mismatch with a suitable grace time.

The critical alarms, which shall be indicated on the AHU graphic and in the alarm list, illuminate the AHU fault lamp and be issued as an email shall be:

- Supply fan failing to run when commanded on
- Extract fan failing to run when commanded on.

The maintenance alarms, which shall be indicated on the AHU graphic and when in the alarm list shall be:

- Fan speed manually overridden
- Supply air temperature sensor out of limits - valve shall be closed.

Trend Logs

The BMS specialist shall set the following trends to be logged:

- Fan change of state - running/not running
- Supply air temperature set point
- Supply air temperature measured value
- space temperature sensor measured values.

These values shall be set for (15) minute intervals however, the user shall be to adjust these to any reasonable value as a minimum 30 seconds for investigative maintenance routines.

Door heaters

The door heaters shall be enabled by the sitewide BMS if the MVHR is running in normal mode and the space temperature is <(18)ºC. the unit shall run to maintain a return air temperature set point of (21)ºC. adjustable by the user at the BMS head end supervisor and at the control enclosures display panel (± 3)ºC. this value shall revert to 0 offset at midnight however a level 3 user can permanently adjust the set point (± 3)ºC.

The valve shall fully open and close on initial start-up and shall open during the plant water flush routine.

Fire Mode

In a fire mode the unit shall shut down through software hardwired interlock.

System Alarms

The BMS shall monitor the system for status and raise alarms on system mismatch with a suitable grace time.

The maintenance alarms, which shall be indicated on the AHU graphic and when in the alarm list shall be:

- System fault
- unit manually overridden
- Return air temperature sensor out of limits - valve shall be closed.

Trend Logs

The BMS specialist shall set the following trends to be logged:

- unit change of state - running/not running
- Return air set point
- Return air measured value.

3.15 Boiler House Ventilation

The boiler house shall be ventilated by a set of variable volume run and standby supply and extract fans. The fans shall run at variable speed depending upon the number of boilers required and to maintain a positive pressure within the boiler house.

The individual fan units shall run if the fan BMS HOA switch is in the hand position when it shall run for (4) hours and then revert to auto control.

The supply air temperature shall be maintained at a minimum (10)^{o}C. by modulation of the 2 port PICV for the heating coil.

3.15.1 Controls Hardware

The BMS specialist shall provide a form 2B type 2 control panel for each system along with all fan inverters. There shall be one power and two control panels one serving supply and extract fan designated A and the other serving supply and extract fan designated B. This will provide operation of a complete supply and extract system if one control panel is isolated.

The fans shall be controlled by the BMS supplied DDC web enabled controller that communicates to the sitewide BMS via the converged network utilising BACnet/IP. The controller is held within a non-door interlocked section of the AHU MCC and is provided with a backlit colour display mounted on the fascia of the panel.

The BMS specialist shall provide safety interlocks between the fire alarm system that if active shall shut down the ventilation system.

The BMS specialist shall provide all controls instruments actuators for the operation of the system. The low and high pressure switches and the Frost stat shall be duplicated and individually wired to the two control panels. Panel CE-B2-01A shall be the master control panel and send instructions (4-20mA) to the standby panel for the operation and monitoring of fans attached to the panel. If the master panel fails then the standby panel shall take control of the fans and run duty supply and extract fan at a fixed speed.

The BMS specialist shall provide the 2 port PICV and associated actuator and all necessary instrumentation for the control and monitoring of the heater battery. The frost stat shall be complete with a (0-10) minute timer that shall allow the fan set to be enabled prior to the boiler running. The valve shall be controlled such that it is normally open and closes as appropriate. On power failure the actuators should spring to the open position.

The BMS specialist shall provide a separate boiler control safety panel that shall be hardwired to the two boiler house ventilation panels. This interface shall be used to prove supply and extract fan flow proving as part of the boiler safety circuit.

The BMS specialist shall provide safety interlocks between the fire alarm system, damper end switches and the manual reset high & low pressure suction switch. If any of these are fault mode the fan set shall shut down through hardwired interlocking.

The BMS specialist shall provide all software interlocking that would include hardwired interlocks, fan software HOA switch and no existing fan alarm. If any of these are in a fault mode then the fan shall not be able to operate. Where software switches are provided if these are in the “HAND” mode then the fan shall be able to run assuming all hardwired interlocks are healthy. The system shall revert to auto after 4 hours, this time limit is only adjustable in software configuration mode.

The fascia of the control section shall include control circuit healthy lamp, a system running lamp, a fault lamp and a reset button.

The plant status and plant HOA switches shall form part of a GUI displayed on an android style backlit colour display panel. This panel shall be mounted on the fascia of the control enclosure shall act as a browser to the embedded graphics held within main plant controller. The plant graphic, which may be the same as the graphic displayed on the BMS head end supervisor, shall be held within the DDC controller and accessed via this web browser from the display panel. The user shall be to manipulate and review the plant status directly through this graphic with a user specific password. Any user shall be able to view the plant status directly through this graphic without any password required. The BMS specialist shall configure for each controller 3 users. User 1 shall have view only access, user 2 shall have the same right as user 1 and be able to access the plant and fan HOA switch, whilst user 3 can access all information using their unique password.

The fans require a manual speed control when operating in a manual mode. This manual speed control limited to a minimum of 20 Hz shall be available to the user through a user adjustable GUI knob displayed on the BMS head end supervisor and at the fan control panel.

The major alarms when active shall illuminate the panel alarm lamp. When the alarm reset button is operated ALL existing alarms within this local controller shall be cleared.

Each fan shall be able to be selected at the BMS head end supervisor and the fan control panel for HOA operation by the BMS software switch. If a fan is selected to off then the duty shall change to the other pair.

3.15.2 Operation

The duty supply and duty extract fan shall be enabled at minimum speed whenever a fan is required to operate. The minimum speed shall be hard coded within the inverter (15)Hz and form part of the BMS control strategy.

The system is required to operate if any boiler is required to run in the automatic mode. If boilers are selected to operate manually through the BMS boiler HOA switches then the same fan speed control are described below shall be initiated.

Generally the duty fan shall always be either A or B as these are driven from the same control panel.

When the system is required to operate and assuming all interlocks are healthy the duty supply and extract fan shall be enabled.

Any fan can be selected to run through the BMS HOA switch, assuming all interlocks are healthy, which is accessible at the BMS head end supervisor and the control panel display unit. When this method is selected the fan shall run for a maximum of (4) hours and then revert to auto.

The fans run at variable speed with the supply and extract at different settings dependent on two measured values.
There are 6 boilers with each pair having a flue fan. As each boiler is enabled the supply and extract fan speed is required to increase to maintain both the room differential pressure and the combustion air.

The fan speeds shall be:

Number of boilers enabled	Supply fan speed	Extract fan speed
1	20%	20%
2	20%	20%
3	60%	55%
4	60%	60%
5	100%	95%
6	100%	95%

If the differential pressure in the boiler house is below the surrounding space then the supply fan speed shall be increased until the boiler house is >(45)Pa above the surrounding space. The extract fan shall continue to operate at the speed required for the boilers. This additional speed required for the supply fan shall always take precedence over the speed required for the number of boilers.

If during normal automatic operation either supply or extract fan fails then the other pair of supply and extract fans shall be enabled. This will ensure that system A or system B generally run at the same time. If there are two failures at the same time in separate panels then the system shall shut down and require a manual intervention.

The fans shall duty rotate on a weekly basis and whenever the system is off. If duty rotation has not taken place for (336) hours then the boiler system shall be disabled and the duty rotation carried out, the boilers shall then restart in the normal control.

Thermal Control

The supply air temperature set point shall be a nominal (10)°C. user adjustable (± 3)°C. At the BMS head end supervisor and the plant control graphic. The valve shall be modulated to maintain the supply air set point and shall be open power failure and modulate continuously. The valve shall open fully for stage 1 frost protection and shall open and close once per day for (10) minutes to provide valve exercise and water flush unless the valve has been open >(50)% in the previous (18) hours.

If the supply sensor fails then the valve shall be driven fully open.

Frost Stat

The auto reset frost stat shall be complete with a (0-10) minute timer that shall become active if the stat trips but only stop the fan's the timer times out. The timer shall reset automatically if the local duct temperature rises above (10)°C. If the stat trips the heating valve shall be driven fully open and remains fully open for the next (2) hours irrespective of the supply air temperature.

System Alarms

The BMS shall monitor the system for status and raise alarms on system mismatch with a suitable grace time.
The critical alarms, which shall be indicated on the fan graphic and in the alarm list, illuminate the control lamp fault lamp and be issued as an email shall be:

- Fan Inverter Fault
- Loss of power at the control panel
- Fan failing to run when commanded on
- Negative pressure in the boiler house > (25)pa below the surroundings.

Non-critical Alarms

- Sensor Failure.

Trend Logs

The BMS specialist shall set the following trends to be logged:

- Fan change of state - running/not running
- Supply fan speed. Via inverter HLI feedback
- Extract fan speed. Via inverter HLI feedback
- Boiler house room differential pressure
- Number of boilers enabled.
- Supply air set point
- measured supply air temperature.
- Valve position - BMS output.

These values shall be set for (15) minute intervals however, the user shall be to adjust these to any reasonable value as a minimum 30 seconds for investigative maintenance routines.

3.16 Heating System Lower Levels

The heating to the lower levels is generated from 6 gas fired boilers located in the basement. Primary water is circulated by 3 duty duty/standby variable speed pump sets to a low loss header system.

Low Temperature hot water is circulated to the tenant spaces that include the office air handling plants, the retail plate heat exchangers and the office plate heat exchangers via variable volume duty duty/standby pump sets. The pump set run to maintain the required differential pressure set point at the least favoured sensor. These sensor set points are automatically adjusted between limits in an attempt to have at least one control valve >(80)% open. If the pumps are running at minimum speed and the differential pressure remains above set point then the pump bypass valves shall modulate open.

Low temp hot water is circulated to the landlords system via a variable volume pumps that serves the retail AHUs on level 1 and the landlord services on the ground floor and in the basement. The pumps run at variable volume to maintain the system differential pressure set point. If the pumps are running at minimum speed and the differential pressure remains above set point then the pump bypass valves shall modulate open.

LTHW backup is provided to the upper floor heating system via a variable volume duty standby pump set. The pump set is enabled if the HWS water source heat pump has failed and HWS is required or if the air source heat pump has failed and heating is required. When running in this mode the pumps run at 2 fixed speeds.

Low temp hot water is provided to the lower levels HWS calorifiers via a constant volume pump set operating as duty standby. The duty pump is enabled whenever the HWS valves are >(70)% open and the system is in demand and whenever pasteurisation is required.

All pump sets duty rotate on a weekly basis and if in a fault mode.

All duty pumps run for the water circulation routine.

All pumps are provided with BMS head off auto switches and the complete system as a common hand off auto switch.
If the heating system has been enabled for a continuous [336] hours, then the system is shut down, control loops released, duty rotation carried out and the system restarted if a heating demand is active.

3.16.1 Controls Hardware

The BMS specialist shall provide two form 2B type 2 mechanical services power boards and 5 form 1 control panels.

The BMS specialist shall provide a boiler safety panel (CE-B2-01C) that should be powered from (MCC-B2-01), the MCC shall include a UPS for the DDC panel controller and gas and CO monitoring system. The boiler safety panel shall monitor the boiler house supply and extract fans for flow proving, the pressurisation unit for a healthy state, the fire alarm system, the primary boiler pump flow proving and shall contain the gas, CO monitoring system all of which shall be proven healthy allowing the boilers to operate. The healthy signal shall remain active with a 0-2 minute hardwired timer. The timer shall start if the safety circuit fails but remake if the circuit returns to a healthy state within 2 minutes. This will allow pump and fan changeover for duty rotation and in a fault mode.

The panel shall include pump hardwired safety interlocks from the pressurisation unit low pressure healthy switch and the separate low-pressure switch wired in parallel either of which requires to be healthy for the pumps to run.

The BMS specialist shall provide all pump software interlocking that would include hardwired interlocks, pump software HOA switch and no existing pump alarm. If any of these are in a fault mode then the pump shall not be able to operate. Where software switches are provided if these are in the “HAND” mode then the pump shall be able to run assuming all hardwired interlocks are healthy. The system shall revert to auto after 4 hours, this time limit is only adjustable in software configuration mode.

The BMS specialist shall provide all boiler software interlocking that would include hardwired interlocks from the safety panel, individual boiler isolation valve proven open, boiler software HOA switch and no existing boiler alarm. If any of these are in a fault mode then the boiler shall not be able to operate. Where software switches are provided if these are in the “HAND” mode then the boiler shall be able to run assuming all hardwired interlocks are healthy. The system shall revert to auto after 4 hours, this time limit is only adjustable in software configuration mode.

The fascia of the control section shall include control circuit healthy lamp, a system running lamp, a fault lamp and a reset button.

The plant status and plant HOA switches shall form part of a GUI displayed on an android style backlit colour display panel. This panel shall be mounted on the fascia of the control enclosure shall act as a browser to the embedded graphics held within main plant controller. The plant graphic, which may be the same as the graphic displayed on the BMS head end supervisor, shall be held within the DDC controller and accessed via this web browser from the display panel. The user shall be to manipulate and review the plant status directly through this graphic with a user specific password. Any user shall be able to view the plant status directly through this graphic without any password required. The BMS specialist shall configure for each controller 3 users. User 1 shall have view only access, user 2 shall have the same right as user 1 and be able to access the plant and fan HOA switch, whilst user 3 can access all information using their unique password.

The pumps require a manual speed control when operating in a manual mode. This manual speed control limited to a minimum of 20 Hz shall be available to the user through a user adjustable GUI knob displayed on the BMS head end supervisor and at the pump control panel.

The major alarms when active shall illuminate the panel alarm lamp. When the alarm reset button is operated ALL existing alarms within this local controller shall be cleared.

Each pump shall be user selectable at the BMS supervisor and the pump control panel to operate in the HOA mode by the BMS software switch.

Each pump set shall be provided with a duty/duty assist pump selection software switch that rotates the pumps in a cyclic manner through selection at the BMS supervisor or the pump control panel.

The BMS specialist shall provide MID approved heat meter communicating BACnet/MSTP and connect this to the EMS. The energy and flow/temperature values shall be displayed on the appropriate system graphic and separately on energy display graphic.

All modulating and isolation valves generally operate in auto mode. However, head end and pump Control Panel shall provide the user with manual override of these valves such that they can be permanently closed, open, in automatic mode at any fixed position. When the valves are in any mode of the Automatic these shall be clearly indicated BMS head end supervisor graphic and the pump Control Panel display graphic.

3.16.2 Operation - Tenant Heating System

The tenant heating system pumps (CPP/B2/07,08,09) that operate duty/duty/standby shall be enabled whenever a heating demand is active, for stage 1 frost protection, water quality routine and if the pump HOA software switch is in the hand or auto mode.

BMS HOA Software

If the pump software switch is in the Hand mode the pump shall run assuming all hardwired interlocks are healthy for (4) hours and revert to auto.

Stage 1 Frost Protection

If the outside air temperature is at stage 1 frost protection then the pump set is enabled. Stage 1 frost protection shall become active if the pump set is off and the outside air temperature is <(3)^{o}C. The pump set shall run in normal pressure control with pump changeover as necessary.

Water Quality Routine

If the water quality routine is active the pump set is enabled and operates under normal pressure control with pump changeover as necessary. The water quality routine selection is held within the pump controller (CE-B2-01A) and transmitted as a flag to all connected AHUs, retail and office plate heat exchanger control panels and the pump bypass valve. These remote control panels shall open fully the associated heating valve, unless the PHX or AHU is operating in normal mode, or

the control valve has been >(50)% open for >(1) hour in the previous (18) hours. The valve remains open until the water quality routine is disabled or the plant is required to operate normally. The water quality routine operate under a fixed time clock that is nominally set for (04.00)am for (1) hour on a daily basis. The calendar is fully adjustable at the BMS head end supervisor however, if the routine has not operated in the previous (72) hours a BMS alarm shall be raised. The water quality routine shall be held off if stage 1 frost protection is active.

Normal Operation

The system heating demand shall be determined based upon the served valves positions. If any served heat exchanger or any served AHU heating valve is >(20)% open and in a heating mode then the duty pump shall be enabled. The heating demand shall remain active until all served valves are closed for >(5) minutes.

When the system is required to operate the duty pump shall be enabled, assuming all interlocks are healthy, and the pump speed modulated to maintain the differential pressure set point at the least favoured sensor. If both field sensors are out of range then control shall revert to the plant room differential pressure sensor otherwise, this sensor is a monitoring sensor only.

When the duty pump is running at >(90)% BMS output then the assist duty pump shall be enabled, assuming all interlocks are healthy and both pumps run at the same speed. The assist pump shall be disabled if both pumps are running at <(40)% for >(5) minutes. The assist pump shall also be disabled if the measured flow rate is <(9)L/sec. If the duty pump is running at minimum speed and the differential pressure remains above set point then the pump bypass valves shall modulate to maintain the differential pressure set point.

The pump control differential pressure sensors shall have individual automatic adjustable set points. The nominal set point shall be (150)Kpa for the remote sensors and (200)Kpa for the Plantroom mounted sensor. The remote sensors set point shall automatically reset between limits (100 to 200)Kpa, to maintain at least one valve >(80)% open. Whenever the system starts the nominal set point shall be (150)Kpa, after (30) minutes of operation if all AHU heating and plate heat exchanger valves are <(70)% open the set point shall be reduced by 10Kpa. If however any valve is >(80)% open the set point shall be increased by (10)Kpa. This resetting shall continue at (30) minute intervals until the end of occupancy, if all valves remain <(70)% open then the set point continues to reduce, if any valve remains above (80)% open then the set point continues to increase.

If the pump is running in the software HOA switch in hand mode then the pump speed shall be the minimum set within the inverter. In this hand mode the pump speed can be modulated between (10 Hz to 50) HZ through a user selectable point on the BMS graphic and at the pump control panel.

If the duty pump fails to operate then the system carries out a duty rotation such that the failed duty pump is now in the standby position.

The duty pumps rotate on a weekly basis.

Sensor Faults

The control sensors shall be monitored and if out of range then alternative sensors shall be utilised for the control strategy.

- If either remote differential pressure sensor is out of range then it is removed from the pump speed control strategy
- If both remote differential pressure sensors are out of range then pump speed reverts to the plant room differential pressure sensor
- If the outside air temperature sensor is out of range then a temperature of 1°C. shall be assumed.

System Alarms

The BMS shall monitor the system for status and raise alarms on system mismatch with a suitable grace time.

The critical alarms, which shall be indicated on the pump graphic and in the alarm list, illuminate the pump control panel fault lamp and be issued as an email shall be:

- Pump failing to run when commanded on.

The maintenance alarms, which shall be indicated on the pump graphic and when in the alarm list shall be:

- Differential pressure sensor out of range
- Differential pressure >(20)Kpa below set point
- Pump speed manually overridden
- Pump in manual control.

Trend Logs

The BMS specialist shall set the following trends to be logged:

- Pump change of state - running/not running
- Pump speed BMS output
- Pump speed feedback from inverter
- Differential pressure set point(s)
- Differential pressure measured value(s)
- System flow temperature. (Dedicated temperature sensor)
- Energy meter LTHW entering water temperature
- Energy meter LTHW leaving water temperature
- Energy meter LTHW flow rate
- Instantaneous heat energy
- Accumulative heat energy.

These values shall be set for (15) minute intervals however, the user shall be to adjust these to any reasonable value as a minimum 30 seconds for investigative maintenance routines.

3.16.3 Operation - Landlord Heating System

The landlord heating system pumps (CPP/B2/10, 11, 12) that operate duty/duty/standby shall be enabled whenever a heating demand is active, for stage 1 frost protection, water quality routine and if the pump HOA software switch is in the hand or auto mode.

BMS HOA Software

If the pump software switch is in the Hand mode the pump shall run assuming all hardwired interlocks are healthy for (4) hours and revert to auto.

Stage 1 Frost Protection

If the outside air temperature is at stage 1 frost protection then the pump set is enabled. Stage 1 frost protection shall become active if the pump set is off and the outside air temperature is <(3)^{o}C. The pump set shall run in normal pressure control with pump changeover as necessary.

Water Quality Routine

If the water quality routine is active the pump set is enabled and operates under normal pressure control with pump changeover as necessary. The water quality routine selection is held within the pump controller (CE-B2-02A) and transmitted as a flag to all connected AHUs, FCUs and plate heat exchanger control panels and the pump bypass valve. These remote control panels shall open fully the associated heating valve, unless the PHX, FCU or AHU is operating in normal mode, or the

control valve has been >(50)% open for >(1) hour in the previous (18) hours. The valve remains open until the water quality routine is disabled or the plant is required to operate normally. The water quality routine operate under a fixed time clock that is nominally set for (04.00)am for (1) hour on a daily basis. The calendar is fully adjustable at the BMS head end supervisor however, if the routine has not operated in the previous (72) hours a BMS alarm shall be raised. The water quality routine shall be held off if stage 1 frost protection is active.

Normal Operation

The system heating demand shall be determined based upon the served valves positions. If any served heat exchanger or any served AHU heating valve is >(20)% open and in a heating mode then the duty pump shall be enabled. The heating demand shall remain active until all served valves are closed for >(5) minutes.

When the system is required to operate the duty pump shall be enabled, assuming all interlocks are healthy, and the pump speed modulated to maintain the differential pressure set point at the least favoured sensor. If both field sensors are out of range then control shall revert to the plant room differential pressure sensor otherwise, this sensor is a monitoring sensor only.

When the duty pump is running at >(90)% BMS output then the assist duty pump shall be enabled, assuming all interlocks are healthy and both pumps run at the same speed. The assist pump shall be disabled if both pumps are running at <(40)% for >(5) minutes. The assist pump shall also be disabled if the measured flow rate is <(1)L/sec. If the duty pump is running at minimum speed and the differential pressure remains above set point then the pump bypass valves shall modulate to maintain the differential pressure set point.

The pump control differential pressure sensors shall have individual automatic adjustable set points. The nominal set point shall be (150)Kpa for the remote sensors and (200)Kpa for the Plantroom mounted sensor. The remote sensors set point shall automatically reset between limits (100 to 200)Kpa, to maintain at least one valve >(80)% open. Whenever the system starts the nominal set point shall be (150)Kpa, after (30) minutes of operation if all AHU heating and plate heat exchanger valves are <(70)% open the set point shall be reduced by 10Kpa. If however any valve is >(80)% open the set point shall be increased by (10)Kpa. This resetting shall continue at (30) minute intervals until the end of occupancy, if all valves remain <(70)% open then the set point continues to reduce, if any valve remains above (80)% open then the set point continues to increase.

If the pump is running in the software HOA switch in hand mode then the pump speed shall be the minimum set within the inverter. In this hand mode the pump speed can be modulated between (10 Hz to 50) HZ through a user selectable point on the BMS graphic and at the pump control panel.

If the duty pump fails to operate then the system carries out a duty rotation such that the failed duty pump is now in the standby position.

The duty pumps rotate on a weekly basis.

Sensor Faults

The control sensors shall be monitored and if out of range then alternative sensors shall be utilised for the control strategy.

- If either remote differential pressure sensor is out of range then it is removed from the pump speed control strategy
- If both remote differential pressure sensors are out of range then pump speed reverts to the plant room differential pressure sensor
- If the outside air temperature sensor is out of range then a temperature of 1°C. shall be assumed.

System Alarms

The BMS shall monitor the system for status and raise alarms on system mismatch with a suitable grace time.

The critical alarms, which shall be indicated on the pump graphic and in the alarm list, illuminate the pump control panel fault lamp and be issued as an email shall be:

- Pump failing to run when commanded on.

The maintenance alarms, which shall be indicated on the pump graphic and when in the alarm list shall be:

- Differential pressure sensor out of range
- Differential pressure >(20)Kpa below set point
- Pump speed manually overridden
- Pump in manual control.

Trend Logs

The BMS specialist shall set the following trends to be logged:

- Pump change of state - running/not running
- Pump speed BMS output
- Pump speed feedback from inverter
- Differential pressure set point(s)
- Differential pressure measured value(s)
- System flow temperature. (Dedicated temperature sensor)
- Energy meter LTHW entering water temperature
- Energy meter LTHW leaving water temperature
- Energy meter LTHW flow rate
- Instantaneous heat energy
- Accumulative heat energy.

These values shall be set for (15) minute intervals however, the user shall be to adjust these to any reasonable value as a minimum 30 seconds for investigative maintenance routines.

3.16.4 Operation Air Source Heat Pump LTHW Backup

The lower level building LTHW backup to the upper level building air source heat pump and the upper level building HWS water source heat pump is provided by duty/duty/standby pump set (CPP/B2/13, 14, 15) running at variable volume located in the basement plant room. The system is enabled if either the upper level HWS water source heat pump is not available and HWS is required or if the rooftop air source heat pump is not available and heating is required to the upper levels.

The pump set will also operate for water quality routine and if the pump HOA software switch is in the hand or auto mode, the pumps duty rotate on a weekly basis and if in a fault mode.

These pumps provide LTHW Boiler generated water to either the upper level HWS via a direct connection and/or to the upper level heating system via an intermediate plate heat exchanger. On the upper level side of the plate heat exchanger pump set (CPP/B2/23, 24) circulates constant volume water to the upper level heating low loss header.

BMS HOA Software

If the pump software switch is in the Hand mode the pump shall run assuming all hardwired interlocks are healthy for (4) hours and revert to auto.

Water Quality Routine

If the water quality routine is active the pump set is enabled and operates under low speed control. The water quality routine operate under a fixed time clock that is nominally set for (04.00)am for (1) hour on a daily basis. The calendar is fully adjustable at the BMS head end supervisor however, if the routine has not operated in the previous (72) hours a BMS alarm shall be raised. The water quality routine shall be held off if stage 1 frost protection is active.

In this mode the plate heat exchanger isolation valve is open fully.

If the upper level HWS system has not been utilised in the previous (48) hours then the isolation valves to the HWS system are open fully and the pump run at low speed. The upper level HWS system shall not be operating at this time and the isolation valves to the water source heat pump shall be closed.

Normal Operation Backup To Upper Floor HWS

The system is normally off and only operates to provide backup to the upper floor heating and domestic hot water system. However, water quality is provided as is manual control via the BMS hand off auto switches.

The system is isolated from the upper floors by BMS controlled 2 port valves that require to be opened before the pumps can run.

The duty pumps shall be enabled at a fixed speed (X)Hz assuming all interlocks are healthy if the upper floor HWS system is active and the LTHW flow temperature from the WSHP is < (40)^{o}C. or if the WSHP is in a fault mode. The system shall also run if the upper floor HWS is in pasteurisation mode and heating is not available from the water source heat pump.

The pump hardwired interlocks include - LTHW pressurisation unit LP healthy or separate LP switch healthy from CE-B2-01C, the pump software interlocks include hardwired interlocks, pump BMS HOA switch in auto and isolation valves 5040/CVO/1 & CVO/2 are proven open. Additionally the water source heat pump requires to be disabled.

The system continues to operate until the end of occupancy of the upper floor HWS when the pumps shall shut down and the isolation valves closed.

Normal Operation Backup to Upper Floor LTHW System

The system is normally off and only operates to provide backup to the upper floor heating system. However, water quality is provided as is manual control via the BMS hand off auto switches.

The system is isolated from the upper floor plate heat exchanger by a BMS controlled 2 port valves that require to be opened before the pumps can run.

The duty pumps shall be enabled at a fixed speed (Y)Hz assuming all interlocks are healthy if the upper floor air source heat pump is not available, and heating is required.

The pump hardwired interlocks include - LTHW pressurisation unit LP healthy or separate LP switch healthy from CE-B2-01C, the pump software interlocks include hardwired interlocks, pump BMS HOA switch in auto and isolation valve 5040/CVO/3 proven open.

The system continues to operate until the end of occupancy of the upper floor when the pumps shall shut down, the isolation valves closed, and the air source heat pump returns automatic control with regard to valve positions.

Normal Operation Backup to Upper Floor LTHW and HWS System

If the pumps are required to operate to support both the heating and the HWS system then the floor isolation valves require to be opened, the air source heat pump is disabled and the water source heat pump disabled.

The 2 duty pumps are running at a fixed speed (Z)Hz assuming all interlocks are healthy until the end of occupancy for the systems.

Pump Manual Operation

If the pump is running in the software HOA switch in hand mode then the pump speed shall be the minimum set within the inverter. In this hand mode the pump speed can be modulated between (10 Hz to 50) HZ through a user selectable point on the BMS graphic and at the pump control panel.

Pump Fault

If the duty pump fails to operate then the system carries out a duty rotation such that the failed duty pump is now in the standby position.

Pump Duty Rotation

The duty pumps rotate on a weekly basis.

System Alarms

The BMS shall monitor the system for status and raise alarms on system mismatch with a suitable grace time.

The critical alarms, which shall be indicated on the pump graphic and in the alarm list, illuminate the pump control panel fault lamp and be issued as an email shall be:

- Pump failing to run when commanded on

The maintenance alarms, which shall be indicated on the pump graphic and when in the alarm list shall be:

- Pump speed manually overridden
- Pump in manual control.

Trend Logs

The BMS specialist shall set the following trends to be logged:

- Pump change of state - running/not running
- Pump speed BMS output
- Pump speed feedback from inverter
- System flow temperature. (Dedicated temperature sensor)
- Energy meter LTHW entering water temperature
- Energy meter LTHW leaving water temperature
- Energy meter LTHW flow rate
- Instantaneous heat energy
- Accumulative heat energy
- WSHP change of state – enabled/off
- ASHP change of state – enabled/off.

These values shall be set for (15) minute intervals however, the user shall be to adjust these to any reasonable value as a minimum 30 seconds for investigative maintenance routines.

3.16.5 Primary Pumps

The primary pumps (CPP/B2/33, 34, 35) run at variable speed to maintain the required flow rate through the enabled boilers. The pumps are enabled whenever a heating demand is active, for stage 1 frost protection, water quality routine and if the pump HOA software switch is in the hand or auto mode.

BMS HOA Software

If the pump software switch is in the Hand mode the pump shall run assuming all hardwired interlocks are healthy for (4) hours and revert to auto.

Stage 1 Frost Protection

If the outside air temperature is at stage 1 frost protection then the duty pump set is enabled. Stage 1 frost protection shall become active if the pump set is off and the outside air temperature is <(3)°C. The pump set shall run at fixed speed.

Stage 2 frost protection

The pump sets run for stage 2 frost protection

Water Quality Routine

If the water quality routine is active the duty pump set is enabled and operates at a fixed speed with pump changeover as necessary. In this mode all boiler isolation valves shall be opened. The water quality routine operate under a fixed time clock that is nominally set for (04.00)am for (1) hour on a daily basis. The calendar is fully adjustable at the BMS head end supervisor however, if the routine has not operated in the previous (72) hours a BMS alarm shall be raised. The water quality routine shall be held off if stage 1 frost protection is active or if the system is running in normal control.

Pump Interlocks

The pumps shall be hardwired interlocked with at least 1 boiler isolation valve proven open, the pressurisation unit low pressure healthy and the separate low-pressure switch either of which require to be healthy before the pump can run. The software interlocks shall include the hardwired interlocks, no existing pump alarm, pump BMS HOA switch in hand or auto, heating system BMS HOA switch in the hand or auto mode.

Normal Operation

The system normal heating demand shall be active if any of the server systems are in a heating mode. When the demand is active the lead boiler isolation valve shall be opened and when proven the lead duty primary pump shall be enabled. The pump shall run at minimum speed of (9)L/sec. This flow rate shall be measured at the primary heating flow meter and additionally a look up table shall be provided as a fallback to this heating flow meter.

Required Pumps and Pump Speeds

The pump speeds shall be the greater of the following:

Boiler Isolation Valve Open	System Flow Rate L/Sec	Number Of Pumps Required	Pump Speed Hz
1	9	1	15
2	18	1	30
3	27	2	25
4	36	2	35
5	45	2	40
6	54	2	50

If the pump is running in the software HOA switch in hand mode then the pump speed shall be the minimum set within the inverter. In this hand mode the pump speed can be modulated between (10 Hz to 50) HZ through a user selectable point on the BMS graphic and at the pump control panel.

If the duty pump fails to operate then the system carries out a duty rotation such that the failed duty pump is now in the standby position.

The duty pumps rotate on a weekly basis.

Sensor Faults

The control sensors shall be monitored and if out of range then alternative sensors shall be utilised for the control strategy.

- If the outside air temperature sensor is out of range then a temperature of 1ºC. shall be assumed
- Flow meter out of range – use look up table for pump speed.

System Alarms

The BMS shall monitor the system for status and raise alarms on system mismatch with a suitable grace time.

The critical alarms, which shall be indicated on the pump graphic and in the alarm list, illuminate the pump control panel fault lamp and be issued as an email shall be:

- Pump failing to run when commanded on.

The maintenance alarms, which shall be indicated on the pump graphic and when in the alarm list shall be:

- Flow rate >(10)L/sec below set point. Only active if the flowmeter is active
- Pump speed manually overridden
- Pump in manual control.

Trend Logs

The BMS specialist shall set the following trends to be logged:

- Pump change of state - running/not running
- Pump speed BMS output
- Pump speed feedback from inverter
- Required system flow rate
- Measured system flow rate
- System flow temperature. (Dedicated temperature sensor)
- System return temperature (dedicated temperature sensor)
- Energy meter LTHW entering water temperature
- Energy meter LTHW leaving water temperature
- Energy meter LTHW flow rate
- Instantaneous heat energy
- Accumulative heat energy.

These values shall be set for (15) minute intervals however, the user shall be to adjust these to any reasonable value as a minimum 30 seconds for investigative maintenance routines.

3.16.6 Boilers

The gas boilers are enabled whenever heating is required. Heating is required if the server systems are in a heating demand mode, if stage 2 frost protection is required or if the heating system BMS HOA switch is in the hand mode. In the hand mode the system runs for (4) with normal thermal control returning to auto control.

The lead boiler is enabled when heating is required, and all interlocks are healthy. The boiler hardwired interlocks include: boiler house ventilation active, at least one primary pump running, LTHW pressurisation unit healthy, boiler isolation valve proven open and gas safety circuit healthy. The site wide interlocks are provided from control panel CE-B2-01A.

The lead boiler isolation valve shall remain open all times.

When the boiler is required to run demands are sent to the boiler house ventilation system supply and extract and to the primary pump set.

When all interlocks are healthy the lead boiler is enabled and shall remain enabled throughout the entire heating demand period.

If the flow temperature of any served system is >(5)°C. below set point then an additional boiler shall be enabled in the same manner as the lead boiler. The new boiler isolation valve shall be opened, the primary pump set speed increased, the boiler house ventilation fan speed shall be increased and when all interlocks are healthy the new boiler shall be enabled. Additional boilers shall be added if the distribution flow temperatures are >(5)°C. below set point or the temperature in the low loss header between the flows and returns measured at [5010/TIX/1/9] is >(2)°C. below the primary flow temperature measured at [5010/TIX/1/8].

The boiler and hence system flow set point shall be adjusted between set points depending upon the system use. If the HWS is active then the boiler flow set point shall be (75)°C, this shall be user adjustable (70 to 75)°C. If HWS is not active and only heating is required the boiler flow set point shall be (65)°C, this shall be user adjustable (65 to 75)°C.

Boilers shall be disabled in sequence and after a minimum run time of (10) minutes if the flow rate in the primary circuit is >(10)L/sec higher than the combined flow rates in the secondary circuit. Boilers shall also be disabled in sequence if the common boiler return temperature measured at [5010/TIX/1/7] is >(60)°C. Boilers shall also be disabled in sequence if any boiler is running at boiler firing rate <(25)% for >(5) minutes.

Boiler shall have a minimum run time of (10) minutes and a minimum off time of (10) minutes.

When boilers required to be disabled and the boiler shall be disabled and the isolation valve remaining open for a further (2) minutes after which the valve shall be closed, and the primary pump speed reduced to suit the new number of boilers valves required to be opened.

The lead boiler shall be enabled for stage 2 frost protection, if any secondary flow circuit system return is <(20)°C. The lead boiler shall remain enabled until the secondary return temperature is>(60)°C. or if the system is required to operate in normal mode.

Boilers shall be monitored for status by the BMS and if in a fault mode or if enabled and the flow temperature is <(50)°C. shall be assumed to be in a fault mode. Boilers in a fault mode shall be disabled and removed from the control strategy.

Sensor Faults

The control sensors shall be monitored and if out of range then alternative sensors shall be utilised for the control strategy.

- If any secondary flow temperature sensor is out of range then it shall be removed from the control strategy
- If the neutral point low loss header temperature sensor [5010/TIX/1/9] is out of range it shall be removed from the control strategy
- If the common boiler return temperature sensor [5010/TIX/1/7] is out of range it shall be removed from the control strategy
- If the heat meter flow rate is out of range it shall be removed from the control strategy. Boiler sequencing ON shall revert to the neutral point low loss header temperature sensor. Boiler sequencing OFF shall revert to the common boiler return temperature sensor and/or the boiler firing rate whichever is the smaller demand
- If a secondary heat meter flow rate is out of range it shall be removed from the control strategy. Boiler sequencing ON shall revert to the neutral point low loss header temperature sensor. Boiler sequencing OFF shall revert to the common boiler return temperature sensor and/or the boiler firing rate whichever is the smaller demand.

System Alarms

The BMS shall monitor the system for status and raise alarms on system mismatch with a suitable grace time.

The critical alarms, which shall be indicated on the pump graphic and in the alarm list, illuminate the pump control panel fault lamp and be issued as an email shall be:

- Two pumps failing to run when commanded on
- Boiler common flow temperature <(55)°C. in a heating mode.

The maintenance alarms, which shall be indicated on the pump graphic and when in the alarm list shall be:

- Boiler fault
- Temperature sensor out of range
- Flow meter out of range
- Boiler isolation valve failed to open when commanded
- Boiler isolation valve failed to close when commanded.

Trend Logs

The BMS specialist shall set the following trends to be logged:

- Boiler firing rate
- Boiler leaving temperature
- Primary system flow temperature
- Primary system return temperature
- Primary system low loss header neutral temperature
- Boiler flow temperature set point
- Pump change of state - running/not running
- Energy meter LTHW entering water temperature
- Energy meter LTHW leaving water temperature
- Energy meter LTHW flow rate
- Instantaneous heat energy
- Accumulative heat energy.

These values shall be set for (15) minute intervals however, the user shall be to adjust these to any reasonable value as a minimum 30 seconds for investigative maintenance routines.

3.16.7 LTHW Pressurisation Unit and Water Treatment

The LTHW pressurisation unit and water treatment systems shall be powered from the BMS provided control panels and monitor the status by the BMS.

The pressurisation unit low pressure shall be wired in parallel with a separate low-pressure switch which require to be healthy before the associated pump sets can run.

The pressurisation unit common fault and high pressure switch shall be wired in series and shall be healthy before the boilers sets can be enabled.

The make-up water to the pressurisation unit shall be provided with a flowmeter complete with M-bus connectivity that shall be connected to the sitewide BMS/EMS.

System Alarms

The BMS shall monitor the system for status and raise alarms on system mismatch with a suitable grace time.

The maintenance alarms, which shall be indicated on the pump graphic and when in the alarm list shall be:

- LTHW pressurisation unit common fault including high pressure
- LTHW pressurisation unit low pressure
- LTHW separate pressure switch low-pressure
- Water treatment system fault(s).

3.16.8 Operation HWS LTHW Lower Levels

The domestic hot water systems serving the lower levels is generated from low temperature hot water is provided from the boilers and stored in 3 calorifiers that are provided with shunt pump plate heat exchanger control package.

The water is circulated by an HWS circulation pump to overcome heat losses.

The MEP specialist shall provide package controls and safety thermal interlocks for the temperature control within the calorifiers. The control system shall be enabled by the sitewide BMS as appropriate.

The MEP specialist shall provide the HWS circulating pump with integral speed control and ELV terminals for hardwired control and monitoring. The BMS specialist shall however include switched single phase feeds from the BMS power board in lieu of these ELV terminals being available.

The BMS specialist shall provide a manual reset high temperature cut out for each calorifier and hardwire this to a spring shut 2 port isolation valve mounted in the primary flow to the HWS calorifier.

The BMS specialist shall provide the form 2B type 2 mechanical services power board and form 1 control panels.

The power section shall include an MID electrical meter with the display mounted on the fascia of the panel and connected via Modbus to the sitewide BMS. Separately the BMS specialist shall provide MID electrical meters that maybe Din rail mounted and not necessarily displayed on the panel fascia, to measure electrical energy consumed by the HWS system.

The system shall be controlled by the BMS supplied DDC web enabled controller that communicates to the sitewide BMS via the converged network utilising BACnet/IP. The controller is held within a non-door interlocked section of the control panels and is provided with a backlit colour display mounted on the fascia of the panel.

The LTHW pump hardwired safety interlocks include the pressurisation unit low pressure healthy switch and the separate low-pressure switch wired in parallel either of which requires to be healthy for the pumps to run.

The BMS specialist shall provide all pump software interlocking that would include hardwired interlocks, pump software HOA switch and no existing pump alarm. If any of these are in a fault mode then the pump shall not be able to operate. Where software switches are provided if these are in the “HAND” mode then the pump shall be able to run assuming all hardwired interlocks are healthy. The system shall revert to auto after 4 hours, this time limit is only adjustable in software configuration mode.

The fascia of the control section shall include control circuit healthy lamp, a system running lamp, a fault lamp and a reset button.

The plant status and plant HOA switches shall form part of a GUI displayed on an android style backlit colour display panel. This panel shall be mounted on the fascia of the control enclosure shall act as a browser to the embedded graphics held

within main plant controller. The plant graphic, which may be the same as the graphic displayed on the BMS head end supervisor, shall be held within the DDC controller and accessed via this web browser from the display panel. The user shall be to manipulate and review the plant status directly through this graphic with a user specific password. Any user shall be able to view the plant status directly through this graphic without any password required. The BMS specialist shall configure for each controller 3 users. User 1 shall have view only access, user 2 shall have the same right as user 1 and be able to access the plant and fan HOA switch, whilst user 3 can access all information using their unique password.

The LTHW pumps require a manual speed control when operating in a manual mode. This manual speed control limited to a minimum of 20 Hz shall be available to the user through a user adjustable GUI knob displayed on the BMS head end supervisor and at the pump control panel.
The HWS shunt pumps require a manual speed control when operating in a manual mode. This manual speed control limited to a minimum of 20 Hz shall be available to the user through a user adjustable GUI knob displayed on the BMS head end supervisor and at the pump control panel.

The major alarms when active shall illuminate the panel alarm lamp. When the alarm reset button is operated ALL existing alarms within this local controller shall be cleared.

Each LTHW and calorifiers shunt pump shall be user selectable at the BMS supervisor and the pump control panel to operate in the HOA mode by the BMS software switch.

The LTHW pump set shall be provided with a duty standby pump selection software switch that rotates the pumps in a cyclic manner through selection at the BMS supervisor or the pump control panel.

The BMS specialist shall provide MID approved heat meter communicating BACnet/MSTP and connect this to the EMS. The energy and flow/temperature values shall be displayed on the appropriate system graphic and separately on energy display graphic.

System Operation

The LTHW HWS and associated HWS calorifiers system shall be enabled to a fixed time clock, whenever the toilet ventilation system is active, whenever the shower room ventilation systems are active and to provide pasteurisation. The system shall also run to a BMS system software HOA switch when it shall operate for (4) hours with normal thermal control. The LTHW pumps shall have individual BMS HOA switches for manual selection when the pumps run at the minimum speed held within the inverter and telling manually adjustable value through the BMS supervisor and the pump control display panel.

The HWS is distributed via cold water booster pressure with a circulation HWS pump and heat maintenance tape provided as appropriate. The HWS temperature is maintained by modulation of the 3 port valve with separate high temperature cut out controlled isolation valve.

BMS HOA Software

If the LTHW pump software switch is in the Hand mode the pump shall run assuming all hardwired interlocks are healthy for (4) hours and revert to auto.

If the HWS circulation pump software switch is in the Hand mode the pump shall run assuming all hardwired interlocks are healthy for (4) hours and revert to auto.

If the system BMS HOA switch is in the Hand mode the system shall run with normal thermal control shall run assuming all hardwired interlocks are healthy for (4) hours and revert to auto.

Water Quality Routine

If the water quality routine is active the LTHW pump set is enabled and operates under normal control with pump changeover as necessary. The HWS control valves are thermally controlled in this water quality routine to maintain a water temperature of 65°C. in the storage vessel. The water quality routine operate under a fixed time clock that is nominally set for (04.00)am for (1) hour on a daily basis. The calendar is fully adjustable at the BMS head end supervisor however, if the routine has not

operated in the previous (72) hours a BMS alarm shall be raised. The water quality routine shall be held off if pasteurisation or normal HWS control is active.

Pasteurisation Cycle

The system is enabled once per day for the pasteurisation cycle. In this mode the system operates normally however the calorifiers set point is raised to (65)°C.. The system runs until the temperature measured at the system flow and return temperature sensors is >(60)°C. for >(60) minutes.

The operational time of the pasteurisation cycle is user adjustable but should nominally be set to daily from (04.00)am.

Normal Operation

The duty LTHW HWS pump is enabled at constant speed assuming all interlocks are healthy when the HWS system is required to operate in the normal mode. The system is required to operate if the HWS time clock is active, if any toilet ventilation system is active if either shower room ventilation system is active or if the BMS system software HOA switch is in hand when it shall operate for (4) hours with normal thermal control.

The duty pump shall only run however if any of the 3 port thermal control valves are >(80)% open. The duty pump remains active until all valves are <(10)% open.

The HWS cylinder thermal control shall be provided by the specialist supplier and shall modulate the inlet valve as appropriate and shall enable the calorifiers/heat exchanger shunt pump.

High Temperature Cut Out Safety Interlock

The high temperature cut out shall be hardwired interlocked with the 2 port Spring shut off valve. If the stat trips the valve shall close, and the 3 port valve be driven to full bypass.

If all three high temperature cut out trip then the LTHW circulation pumps shall be stopped through a hardwired interlock.

If the LTHW pump is running in the software HOA switch in hand mode then the pump speed shall be the minimum set within the inverter. In this hand mode the pump speed can be modulated between (10 Hz to 50) HZ through a user selectable point on the BMS graphic and at the pump control panel.

If the duty pump fails to operate then the system carries out a duty rotation such that the failed duty pump is now in the standby position.

The duty pumps rotate on a weekly basis.

Each thermal valve shall be opened and closed once per day in a continuous cycle at (01.00).

Sensor Faults

The control sensors shall be monitored and if out of range then alternative sensors shall be utilised for the control strategy.

- If either calorifier temperature is out of range then the sensors shall be removed from the control strategy.

System Alarms

The BMS shall monitor the system for status and raise alarms on system mismatch with a suitable grace time.

The critical alarms, which shall be indicated on the pump graphic and in the alarm list, illuminate the pump control panel fault lamp and be issued as an email shall be:

- LTHW Pump failing to run when commanded on
- High temperature cut out active.

The maintenance alarms, which shall be indicated on the pump graphic and when in the alarm list shall be:

- HWS circulation pump failed to run stop
- Pump speed manually overridden
- Pump in manual control
- HWS flow temperature <(50)°C. When system in operation
- HWS calorifiers fault.

Trend Logs

The BMS specialist shall set the following trends to be logged:

- Pump change of state - running/not running
- LTHW Pump speed feedback from inverter
- Calorifier temperature sensors
- HWS flow temperature
- HWS return temperature
- Thermal control valve position
- LTHW flow temperature
- Energy meter LTHW entering water temperature
- Energy meter LTHW leaving water temperature
- Energy meter LTHW flow rate
- Instantaneous heat energy
- Accumulative heat energy.

These values shall be set for (15) minute intervals however, the user shall be to adjust these to any reasonable value as a minimum 30 seconds for investigative maintenance routines.

3.17 Heating System Upper Levels

The heating system to the upper floors is provided by the rooftop air source heat pump with support from the gas fired boilers if the air source heat pump is not available.

Heat is circulated from the air source heat pump by a primary constant volume pump set and distributed to the system via a variable volume pump set serving the office plate heat exchangers and the rooftop air handling plants.

3.17.1 Controls Hardware

The BMS specialist shall provide two form 2B type 2 mechanical services power boards and 2 form 1 control panels for the heating system.

The power section shall contain MID approved electrical meter that may be Din rail mounted should monitor the status of the primary pumps allowing energy to be determined for each chilled water system. The power consumed by the air source heat pump shall be monitored at the LV board via Modbus connected MID approved electrical meters.

The system shall be controlled by the BMS supplied DDC web enabled controller that communicates to the sitewide BMS via the converged network utilising BACnet/IP. The controller is held within a non-door interlocked section of the control panels and is provided with a backlit colour display mounted on the fascia of the panel.

The pumps shall be hardwire interlocked with the pressurisation unit and the separate low-pressure switch either of which require to healthy the pump to run. The ASHP shall be hardwired interlocked with the flow proving differential pressure switch across the chiller and software proving of pump flow operation.

The BMS specialist shall provide all pump software interlocking that would include hardwired interlocks, pump software HOA switch and no existing pump alarm. If any of these are in a fault mode then the pump shall not be able to operate. Where software switches are provided if these are in the "HAND" mode then the pump shall be able to run assuming all hardwired interlocks are healthy. The system shall revert to auto after 4 hours, this time limit is only adjustable in software configuration mode.

The BMS specialist shall provide the ASHP hardwired and software interlocking. The hardwired interlocking shall include flow proving by differential pressure, the software interlocking shall include hardwired interlocking, primary pump proven running and the BMS software OA switch in the auto mode.

The fascia of the control section shall include control circuit healthy lamp, a system running lamp, a fault lamp and a reset button.

The pump and ASHP status and plant HOA switches shall form part of a GUI displayed on an android style backlit colour display panel. This panel shall be mounted on the fascia of the control enclosure shall act as a browser to the embedded graphics held within main plant controller. The plant graphic, which may be the same as the graphic displayed on the BMS head end supervisor, shall be held within the DDC controller and accessed via this web browser from the display panel. The user shall be to manipulate and review the plant status directly through this graphic with a user specific password. Any user shall be able to view the plant status directly through this graphic without any password required. The BMS specialist shall configure for each controller 3 users. User 1 shall have view only access, user 2 shall have the same right as user 1 and be able to access the plant and fan HOA switch, whilst user 3 can access all information using their unique password.

The pumps require a manual speed control when operating in a manual mode. This manual speed control limited to a minimum of 20 Hz shall be available to the user through a user adjustable GUI knob displayed on the BMS head end supervisor and at the pump control panel.

The major alarms when active shall illuminate the panel alarm lamp. When the alarm reset button is operated ALL existing alarms within this local controller shall be cleared.

Each pump shall be user selectable at the BMS supervisor and the pump control panel to operate in the HOA mode by the BMS software switch.

The distribution pump set shall be provided with a duty/ duty/standby pump selection software switch that rotates the pumps in a cyclic manner through selection at the BMS supervisor or the pump control panel.

The primary pump set shall be provided with a duty/standby pump selection software switch that rotates the pumps in a cyclic manner through selection at the BMS supervisor or the pump control panel.

3.17.2 Primary Pumps

The primary pumps run at constant speed to maintain the required flow rate through the air source heat pump. The pumps are enabled whenever there is a heating demand, for stage 1 frost protection, water quality routine and if the pump HOA software switch is in the hand or auto mode.

BMS HOA Software

If the pump software switch is in the Hand mode the pump shall run assuming all hardwired interlocks are healthy for (4) hours and revert to auto.

Stage 1 Frost Protection

If the outside air temperature is at stage 1 frost protection then the duty pump set is enabled. Stage 1 frost protection shall become active if the pump set is off and the outside air temperature is <(3)°C. The pump set shall run at fixed speed.

Water Quality Routine

If the water quality routine is active the duty pump set is enabled and operates at a fixed speed with pump changeover as necessary. The water quality routine operate under a fixed time clock that is nominally set for (04.00)am for (1) hour on a daily basis. The calendar is fully adjustable at the BMS head end supervisor however, if the routine has not operated in the previous (72) hours a BMS alarm shall be raised. The water quality routine shall be held off if stage 1 frost protection is active or if the system is running in normal control.

Pump Interlocks

The pumps shall be hardwired interlocked with the pressurisation unit low pressure healthy and the separate low-pressure switch either of which require to be healthy before the pump can run. The software interlocks shall include the hardwired interlocks, no existing pump alarm, pump BMS HOA switch in hand or auto, heating system BMS HOA switch in the hand or auto mode.

Normal Operation

The system normal heating demand shall be active if any of the server systems are in a heating mode. When the demand is active the lead duty primary pump shall be enabled and run at constant speed. The air source heat pump shall be enabled when all interlocks are healthy.

If the pump is running from the software HOA switch in hand mode then the pump speed shall be the minimum set within the inverter. In this hand mode the pump speed can be modulated between (10 Hz to 50) HZ through a user selectable point on the BMS graphic and at the pump control panel.

If the duty pump fails to operate then the system carries out a duty rotation such that the failed duty pump is now in the standby position.

The duty pumps rotate on a weekly basis.

Sensor Faults

The control sensors shall be monitored and if out of range then alternative sensors shall be utilised for the control strategy.

- If the outside air temperature sensor is out of range then a temperature of 1°C. shall be assumed.

System Alarms

The BMS shall monitor the system for status and raise alarms on system mismatch with a suitable grace time.

The critical alarms, which shall be indicated on the pump graphic and in the alarm list, illuminate the pump control panel fault lamp and be issued as an email shall be:

- Pump failing to run when commanded on.

The maintenance alarms, which shall be indicated on the pump graphic and when in the alarm list shall be:

- Pump speed manually overridden
- Pump in manual control.

Trend Logs

The BMS specialist shall set the following trends to be logged:

- Pump change of state - running/not running

- Pump speed BMS output
- Pump speed feedback from inverter
- System flow temperature. (Dedicated temperature sensor)
- System return temperature (dedicated temperature sensor)
- Energy meter LTHW entering water temperature
- Energy meter LTHW leaving water temperature
- Energy meter LTHW flow rate
- Instantaneous heat energy
- Accumulative heat energy.

These values shall be set for (15) minute intervals however, the user shall be to adjust these to any reasonable value as a minimum 30 seconds for investigative maintenance routines.

3.17.3 Upper-level LTHW Pressurisation Unit and Water Treatment

The LTHW pressurisation unit and water treatment systems shall be powered from the BMS provided control panels and monitor the status by the BMS.

The pressurisation unit low pressure shall be wired in parallel with a separate low-pressure switch which require to be healthy before the associated pump sets can run.

The make-up water to the pressurisation unit shall be provided with a flowmeter complete with M-bus connectivity that shall be connected to the sitewide BMS/EMS.

System Alarms

The BMS shall monitor the system for status and raise alarms on system mismatch with a suitable grace time.

The maintenance alarms, which shall be indicated on the pump graphic and when in the alarm list shall be:

- LTHW pressurisation unit common fault including high pressure
- LTHW pressurisation unit low pressure
- LTHW separate pressure switch low-pressure
- Water treatment system fault(s).

3.17.4 Heating System Tenant Upper Level

The tenant heating system pumps that operate duty/duty/standby shall be enabled whenever a heating demand is active, for stage 1 frost protection, water quality routine and if the pump HOA software switch is in the hand or auto mode.

BMS HOA Software

If the pump software switch is in the Hand mode the pump shall run assuming all hardwired interlocks are healthy for (4) hours and revert to auto.

Stage 1 Frost Protection

If the outside air temperature is at stage 1 frost protection then the pump set is enabled. Stage 1 frost protection shall become active if the pump set is off and the outside air temperature is <(3)°C. The pump set shall run in normal pressure control with pump changeover as necessary.

Water Quality Routine

If the water quality routine is active the pump set is enabled and operates under normal pressure control with pump changeover as necessary. The water quality routine selection is held within the pump controller (CE-B2-02B) and transmitted as a flag to all connected AHUs, retail and office plate heat exchanger control panels and the pump bypass valve. These remote control panels shall open fully the associated heating valve, unless the PHX or AHU is operating in normal mode, or the control valve has been >(50)% open for >(1) hour in the previous (18) hours. The valve remains open until the water quality routine is disabled or the plant is required to operate normally. The water quality routine operate under a fixed time clock that is nominally set for (04.00)am for (1) hour on a daily basis. The calendar is fully adjustable at the BMS head end supervisor however, if the routine has not operated in the previous (72) hours a BMS alarm shall be raised. The water quality routine shall be held off if stage 1 frost protection is active.

Normal Operation

The system heating demand shall be determined based upon the served valves positions. If any served heat exchanger or any served AHU heating valve is >(20)% open and in a heating mode then the duty pump shall be enabled. The heating demand shall remain active until all served valves are closed for >(5) minutes.

When the system is required to operate the duty pump shall be enabled, assuming all interlocks are healthy, and the pump speed modulated to maintain the differential pressure set point at the least favoured sensor. If both field sensors are out of range then control shall revert to the plant room differential pressure sensor otherwise, this sensor is a monitoring sensor only.

When the duty pump is running at >(90)% BMS output then the assist duty pump shall be enabled, assuming all interlocks are healthy and both pumps run at the same speed. The assist pump shall be disabled if both pumps are running at <(40)% for >(5) minutes. The assist pump shall also be disabled if the measured flow rate is <(X)[2]L/sec. If the duty pump is running at minimum speed and the differential pressure remains above set point then the pump bypass valves shall modulate to maintain the differential pressure set point.

The pump control differential pressure sensors shall have individual automatic adjustable set points. The nominal set point shall be (150)Kpa for the remote sensors and (200)Kpa for the Plantroom mounted sensor. The remote sensors set point shall automatically reset between limits (100 to 200)Kpa, to maintain at least one valve >(80)% open. Whenever the system starts the nominal set point shall be (150)Kpa, after (30) minutes of operation if all AHU heating and plate heat exchanger valves are <(70)% open the set point shall be reduced by 10Kpa. If however any valve is >(80)% open the set point shall be increased by (10)Kpa. This resetting shall continue at (30) minute intervals until the end of occupancy, if all valves remain <(70)% open then the set point continues to reduce, if any valve remains above (80)% open then the set point continues to increase.

If the pump is running in the software HOA switch in hand mode then the pump speed shall be the minimum set within the inverter. In this hand mode the pump speed can be modulated between (10 Hz to 50) HZ through a user selectable point on the BMS graphic and at the pump control panel.

If the duty pump fails to operate then the system carries out a duty rotation such that the failed duty pump is now in the standby position.

The duty pumps rotate on a weekly basis.

Sensor Faults

The control sensors shall be monitored and if out of range then alternative sensors shall be utilised for the control strategy.

- If either remote differential pressure sensor is out of range then it is removed from the pump speed control strategy
- If both remote differential pressure sensors are out of range then pump speed reverts to the plant room differential pressure sensor

[2] Where X is 85% of the design flow rate of one pump.

- If the outside air temperature sensor is out of range then a temperature of 1ºC. shall be assumed.

System Alarms

The BMS shall monitor the system for status and raise alarms on system mismatch with a suitable grace time.

The critical alarms, which shall be indicated on the pump graphic and in the alarm list, illuminate the pump control panel fault lamp and be issued as an email shall be:

- Pump failing to run when commanded on.

The maintenance alarms, which shall be indicated on the pump graphic and when in the alarm list shall be:

- Differential pressure sensor out of range
- Differential pressure >(20)Kpa below set point
- Pump speed manually overridden
- Pump in manual control.

Trend Logs

The BMS specialist shall set the following trends to be logged:

- Pump change of state - running/not running
- Pump speed BMS output
- Pump speed feedback from inverter
- Differential pressure set point(s)
- Differential pressure measured value(s)
- System flow temperature. (Dedicated temperature sensor)
- Energy meter LTHW entering water temperature
- Energy meter LTHW leaving water temperature
- Energy meter LTHW flow rate
- Instantaneous heat energy
- Accumulative heat energy.

These values shall be set for (15) minute intervals however, the user shall be to adjust these to any reasonable value as a minimum 30 seconds for investigative maintenance routines.

3.17.5 Heating System Tenant Upper Level Backup

Heating to the upper levels in the event of failure of the air source heat pump is provided from pump sets and the gas fired water heater.

If heating is required and the air source heat pump is not available then the duty circulating pump CPP/B2/23, 24 is enabled, assuming all interlocks are healthy, at full speed and the heat demand sent to the heating backup system. This demand shall open the plate heat exchanger isolating valves 5040/CVO/3 and call for the backup pump set CPP/B2/13, 14, 15 to be set to work.

The duty pump shall be enabled on a daily basis for water circulation quality routine and if the pump HOA software switch is in the hand or auto mode. In this mode heating demands are not sent to the backup system.

The pump hardwired interlocks include LTHW upper level pressurisation unit or separate LP switch healthy. The software interlocks include hardwired interlocks, no existing pump alarm, pump BMS HOA switch in auto.

BMS HOA Software

If the pump software switch is in the Hand mode the pump shall run assuming all hardwired interlocks are healthy for (4) hours and revert to auto.

If the pump is running in the software HOA switch in hand mode then the pump speed shall be the minimum set within the inverter. In this hand mode the pump speed can be modulated between (10 Hz to 50) HZ through a user selectable point on the BMS graphic and at the pump control panel.

Water Quality Routine

If the water quality routine is active the duty pump is enabled and run at minimum pump speed.

Normal Operation

When the system is required to operate provide heating duty pump is enabled assuming all interlocks are healthy and the pump set run at full speed.

If the duty pump fails to operate then the system carries out a duty rotation such that the failed duty pump is now in the standby position.

The duty pumps rotate on a weekly basis.

Thermal Control

The flow temperature from the plate heat exchanger system is achieved by modulation of the plate heat exchanger bypass valve to maintain a nominal flow temperature set point (55)^{o}C. with a rise in temperature above set point the valve is modulated towards open to bypass water from the heat exchanger.

Sensor Faults

The control sensors shall be monitored and if out of range then alternative sensors shall be utilised for the control strategy.

- If the flow temperature sensor is out of range control shall revert to the return sensor with a set point of (40)^{o}C.

System Alarms

The BMS shall monitor the system for status and raise alarms on system mismatch with a suitable grace time.

The critical alarms, which shall be indicated on the pump graphic and in the alarm list, illuminate the pump control panel fault lamp and be issued as an email shall be:

- Pump failing to run when commanded on.

The maintenance alarms, which shall be indicated on the pump graphic and when in the alarm list shall be:

- Pump speed manually overridden
- Pump in manual control.

Trend Logs

The BMS specialist shall set the following trends to be logged:

- Pump change of state - running/not running
- Pump speed BMS output
- Pump speed feedback from inverter

- System flow temperature. (Dedicated temperature sensor)
- Bypass valve position
- Energy meter LTHW entering water temperature
- Energy meter LTHW leaving water temperature
- Energy meter LTHW flow rate
- Instantaneous heat energy
- Accumulative heat energy.

These values shall be set for (15) minute intervals however, the user shall be to adjust these to any reasonable value as a minimum 30 seconds for investigative maintenance routines.

3.18 HWS Upper Levels

The upper-level HWS is generated by water source heat pump located in the basement taking energy from the tenant chilled water system return pipe. If the WSHP is not available for use within heat energy to the calorifiers is provided from the gas fired boilers by the LTHW HWS/ASHP circulation standby pump set.

Domestic hot water is generated in the calorifiers that are provided with immersion temperature sensors, thermal control valve, 2 port Spring shut valve, high temperature cut out and shunt pump. The domestic hot water is circulated by pressure from the cold water booster set with an HWS circulation pump and heat maintenance tape as appropriate.

Controls Hardware

Note to BMS team- This description assumes all controls by the BMS specialist. To be confirmed with the HWS supplier.

The MEP specialist shall provide the shunt pumps with integral speed control and ELV terminals for hardwired control and monitoring. The BMS specialist shall however include switched single phase feeds from the BMS power board in lieu of these ELV terminals being available.

The MEP specialist shall provide the water source heat pump complete with all thermal controls and safety interlocks. The BMS specialist shall provide power to the unit from the BMS power board and include all interconnecting controls cabling both to the BMS control panel and required for the water source heat pump local control.

The BMS specialist shall provide a manual reset high temperature cut out for each calorifier and hardwire this to a spring shut 2 port isolation valve mounted in the primary LTHW flow to the HWS calorifier.

The BMS specialist shall provide immersion temperature sensors and modulating 3 port valve for each of the calorifiers.

The BMS specialist shall provide the form 2B type 2 mechanical services power board and form 1 control panels.

The power section shall include an MID electrical meter with the display mounted on the fascia of the panel and connected via Modbus to the sitewide BMS. Separately the BMS specialist shall provide MID electrical meters that maybe Din rail mounted and not necessarily displayed on the panel fascia, to measure electrical energy consumed by the HWS system components such as the LTHW pumps, shunt pumps and the water source heat pump.

The system shall be controlled by the BMS supplied DDC web enabled controller that communicates to the sitewide BMS via the converged network utilising BACnet/IP. The controller is held within a non-door interlocked section of the control panels and is provided with a backlit colour display mounted on the fascia of the panel.

The LTHW pump hardwired safety interlocks include the pressurisation unit low pressure healthy switch and the separate low-pressure switch wired in parallel either of which requires to be healthy for the pumps to run.

The CHW pump hardwired interlocks include the CHW pressurisation unit low pressure healthy switch and the separate low-pressure switch wired in parallel either of which requires to be healthy for the pumps to run.

The water source heat pump hardwired interlocks include proven flow of one LTHW pump and one chilled water pump.

The BMS specialist shall provide all pump software interlocking that would include hardwired interlocks, pump software HOA switch and no existing pump alarm. If any of these are in a fault mode then the pump shall not be able to operate. Where software switches are provided if these are in the "HAND" mode then the pump shall be able to run assuming all hardwired interlocks are healthy. The system shall revert to auto after 4 hours, this time limit is only adjustable in software configuration mode.

The fascia of the control section shall include control circuit healthy lamp, a system running lamp, a fault lamp and a reset button.

The plant status and plant HOA switches shall form part of a GUI displayed on an android style backlit colour display panel. This panel shall be mounted on the fascia of the control enclosure shall act as a browser to the embedded graphics held within main plant controller. The plant graphic, which may be the same as the graphic displayed on the BMS head end supervisor, shall be held within the DDC controller and accessed via this web browser from the display panel. The user shall be to manipulate and review the plant status directly through this graphic with a user specific password. Any user shall be able to view the plant status directly through this graphic without any password required. The BMS specialist shall configure for each controller 3 users. User 1 shall have view only access, user 2 shall have the same right as user 1 and be able to access the plant and fan HOA switch, whilst user 3 can access all information using their unique password.

The LTHW & CHW pumps require a manual speed control when operating in a manual mode. This manual speed control limited to a minimum of 20 Hz shall be available to the user through a user adjustable GUI knob displayed on the BMS head end supervisor and at the pump control panel.

The major alarms when active shall illuminate the panel alarm lamp. When the alarm reset button is operated ALL existing alarms within this local controller shall be cleared.

Each LTHW, CHW and calorifiers shunt pump shall be user selectable at the BMS supervisor and the pump control panel to operate in the HOA mode by the BMS software switch.

The LTHW & CHW pump set shall be provided with a duty standby pump selection software switch that rotates the pumps in a cyclic manner through selection at the BMS supervisor or the pump control panel.

System Operation

The HWS calorifiers and shall be enabled to a fixed time clock, whenever the toilet ventilation system is active, and to provide pasteurisation. The system shall also run to a BMS system software HOA switch when it shall operate for (4) hours with normal thermal control. The LTHW & CHW pumps shall have individual BMS HOA switches for manual selection when the pumps run at the minimum speed held within the inverter and manually adjustable value through the BMS supervisor and the pump control display panel.

Normally heat energy is provided via the water source heat pump if however this is not available then heat shall be provided from the backup LTHW gas fired heating system. This backup will operate automatically however, a user selector switch is provided at the BMS head end supervisor and the system control panel allowing the system to operate either automatically or by the backup heating system.

BMS HOA Software

If the LTHW/CHW pump software switch is in the Hand mode the pump shall run assuming all hardwired interlocks are healthy for (4) hours and revert to auto.

If the calorifier shunt pump software switch is in the Hand mode the pump shall run assuming all hardwired interlocks are healthy for (4) hours and revert to auto.

If the system BMS HOA switch is in the Hand mode the system shall run with normal thermal control shall run assuming all hardwired interlocks are healthy for (4) hours and revert to auto.

Water Quality Routine

If the water quality routine is active the LTHW/CHW pump set is enabled and operates under normal control with pump changeover as necessary. The HWS control valves are thermally controlled in this water quality routine to maintain a water temperature of 65°C. in the storage vessel. The water quality routine operate under a fixed time clock that is nominally set for (04.00)am for (1) hour on a daily basis. The calendar is fully adjustable at the BMS head end supervisor however, if the routine has not operated in the previous (72) hours a BMS alarm shall be raised. The water quality routine shall be held off if pasteurisation or normal HWS control is active.

Pasteurisation Cycle

The system is enabled once per day for the pasteurisation cycle. In this mode the system operates normally however the calorifier set point for both sensors is raised to (65)°C. and the calorifier shunt pump is enabled. The system runs until the temperature measured at both the high-level and low-level calorifier sensors is >(60)°C. for >(60) minutes.

The operational time of the pasteurisation cycle is user adjustable but should nominally be set to daily from (04.00)am.

Normal Operation – WSHP Mode

The duty LTHW HWS pump and the duty CHW pump are enabled at constant speed assuming all interlocks are healthy when the HWS system is required to operate in the normal mode. When all interlocks are healthy the water source heat pump shall be enabled.

The temperature leaving the air source heat pump shall be controlled and managed by the air source heat pump thermal control system
The LTHW pump software interlocks include hardwired interlocks, no existing pump alarm, pump BMS software hand off auto switch in auto.

The chilled water pump software interlocks include hardwired interlocks and no existing pump alarm, pump BMS software hand off auto switch in auto.

The water source heat pump software interlocks include: hardwired interlocks, no existing WSHP alarm, cooling load in the tenant cooling system and tenant cooling system pumps running. If HWS is required and the water source heat pump is not able to operate the system will switch to heating from gas-fired boilers.

The HWS calorifiers thermal control valve shall open fully if the temperature sensor mounted at the top of the calorifiers has a measured temperature <(55)°C or if the lower temperature sensor has a measured value <(45)°C. The valve remains fully open until the temperature sensor at the top of the cylinder and at the bottom both measure >(60)°C. The valve shall however close If either temperature sensor is >(65)°C.

When HWS is not required the air source heat pump shall be disabled, the LTHW and CHW pump shall continue to operate for (5) minutes and then shut down.

High Temperature Cut Out Safety Interlock

The high temperature cut out shall be hardwired interlocked with the 2 port Spring shut off valve. If the stat trips the valve shall close, and the 3 port valve be driven to full bypass.

If all high temperature cut out trip then the LTHW circulation pumps shall be stopped through a hardwired interlock.

If the LTHW on the chilled water pump is running in the software HOA switch in hand mode then the pump speed shall be the minimum set within the inverter. In this hand mode the pump speed can be modulated between (10 Hz to 50) HZ through a user selectable point on the BMS graphic and at the pump control panel.

If the duty pump fails to operate then the system carries out a duty rotation such that the failed duty pump is now in the standby position.

The duty pumps rotate on a weekly basis.

Each thermal valve shall be opened and closed once per day in a continuous cycle at (01.00).

3.18.1 Normal Operation LTHW Backup

The BMS shall monitor the status of the water source heat pump and the tenant cooling system and shall determine whether or not these systems are available for the generation of the HWS.

The normal system shall be deemed not available if:

- Neither LTHW pumps are available for operation or
- If neither CHW pumps are available for operation or
- If the WSHP is not available or
- If the tenant cooling pumps not running
- Or if the system is operating and the HWS storage temperature has fallen below (45)^{o}C.

If any of these are true then the normal system shall be disabled and the LTHW backup initiated

Sensor Faults

The control sensors shall be monitored and if out of range then alternative sensors shall be utilised for the control strategy.

- If either calorifier temperature is out of range then the sensors shall be removed from the control strategy.

System Alarms

The BMS shall monitor the system for status and raise alarms on system mismatch with a suitable grace time.

The critical alarms, which shall be indicated on the pump graphic and in the alarm list, illuminate the pump control panel fault lamp and be issued as an email shall be:

- Pump failing to run when commanded on
- High temperature cut out active.

The maintenance alarms, which shall be indicated on the pump graphic and when in the alarm list shall be:

- Pump speed manually overridden
- Pump in manual control
- Calorifier temperature <(50)^{o}C. When system in operation.

Trend Logs

The BMS specialist shall set the following trends to be logged:

- Pump change of state - running/not running
- CHW pump speed feedback from inverter
- LTHW Pump speed feedback from inverter
- Calorifier temperature sensors
- Thermal control valve position

- Hot Water temperature leaving WSHP
- Hot water temperature entering WSHP
- Tenant cooling water system temperature entering WSHP
- Tenant cooling water system leaving WSHP
- LTHW flow temperature
- Energy meter LTHW entering water temperature
- Energy meter LTHW leaving water temperature
- Energy meter LTHW flow rate
- Instantaneous heat energy
- .Accumulative heat energy.

These values shall be set for (15) minute intervals however, the user shall be to adjust these to any reasonable value as a minimum 30 seconds for investigative maintenance routines.

3.18.2 Upper Level HWS/LTHW Pressurisation Unit and Water Treatment

The LTHW pressurisation unit and water treatment systems shall be powered from the BMS provided control panels and monitor the status by the BMS.

The pressurisation unit low pressure shall be wired in parallel with a separate low-pressure switch which require to be healthy before the associated pump sets can run.

The make-up water to the pressurisation unit shall be provided with a flowmeter complete with M-bus connectivity that shall be connected to the sitewide BMS/EMS.

System Alarms

The BMS shall monitor the system for status and raise alarms on system mismatch with a suitable grace time.

The maintenance alarms, which shall be indicated on the pump graphic and when in the alarm list shall be:

- LTHW pressurisation unit common fault including high pressure
- LTHW pressurisation unit low pressure
- LTHW separate pressure switch low-pressure
- Water treatment system fault(s).

3.19 Cooling

The cooling to the building is provided from 3 roof top air Cooled chillers working in conjunction with one 4 pipe air source heat pump. The air source heat pump provides cooling to the building and heating to the upper floors. The air source heat pump will always be the lead cooling and heating device.

Primary chilled water is circulated by duty/duty/duty standby variable volume pump set located on the roof operating at variable volume to suit the required flow rate through each chiller & ASHP. The primary chilled flow rate will be maintained higher than the secondary flow rate when the chillers are enabled to maintain the required flow temperature and the secondary circuits. Chillers will be disabled when the primary flow rate is higher than that required for one chiller, the air source heat pump will be the lead chiller/heating unit that remain enabled throughout the heating and cooling demand periods.

Chilled water is circulated to the tenant spaces that include the office air handling plants, the retail plate heat exchangers and the office plate heat exchangers via variable volume duty duty/standby pump sets. The pump set run to maintain the required differential pressure set point at the least favoured sensor. These sensor set points are automatically adjusted between limits in an attempt to have at least one control valve >(80)% open. If the pumps are running at minimum speed and the differential pressure remains above set point then the pump bypass valves shall modulate open.

Chilled water is circulated to the landlords system via a variable volume pumps that serve and intermediate plate heat exchanger and a tertiary variable volume pumping system. The tertiary pumping system serves the retail AHUs on level 1 and the landlord services on the ground floor and in the basement. The tertiary pumps run at variable volume to maintain the system differential pressure set point. If the pumps are running at minimum speed and the differential pressure remains above set point then the pump bypass valves shall modulate open.

The secondary side CHW landlords pumps serving the plate heat exchanger run at variable speed to maintain the tertiary side secondary flow temperature nominally (7)^{o}C. If the tertiary side return temperature rises above [10]^{o}C. then the primary side pumps shall slow down to maintain the [11]^{o}C return temperature, however the flow temperature will always take precedence. If the pumps are running at minimum speed and the flow temperature is above set point then the pump bypass valves shall modulate open to reduce the flow set point back to the nominal [10]^{o}C.

The upper floor HWS is generated from a water source heat pump that is served by a constant volume primary pump set drawing energy from the tenant chilled water return system. In the event that you the water source heat pump is failed or if the tenant cooling system is not operating and HWS is required, energy will be provided from the LTHW backup system.

All pump sets duty rotate on a weekly basis and if in a fault mode.

All duty pumps run for the water circulation routine.

All pumps are provided with BMS head off auto switches and the complete system as a common hand off auto switch.

3.19.1 Controls Hardware

The BMS specialist shall provide two form 2B type 2 mechanical services power boards and 3 form 1 control panels for the cooling system.

The power section shall contain MID approved electrical meter that may be Din rail mounted should monitor the status of groups of pumps allowing energy to be determined for each chilled water system. The power consumed by the chillers and the air source heat pumps shall be monitored at the LV board via Modbus connected MID approved electrical meters.

The BMS specialist shall provide all power and controls wiring from the BMS provided controls and power panel to the inverters. The power cabling shall include an on load isolator, complete with early brake late make auxiliary contacts wired to the inverter safety circuit.

The system shall be controlled by the BMS supplied DDC web enabled controller that communicates to the sitewide BMS via the converged network utilising BACnet/IP. The controller is held within a non-door interlocked section of the control panels and is provided with a backlit colour display mounted on the fascia of the panel.

The pumps require to be interlocked with chilled water pressurisation unit however, this is located in the roof and there are chilled water pumps and the basement. The roof pumps shall be hardwired interlocked with the low pressure switch for the pressurisation unit and the separate low-pressure switch directly through control panel CE-R-05A. The basement pumps shall be provided with hardwired interlocking via a local low-pressure switch and through software from the rooftop pressurisation unit. Either the separate low-pressure switch or the pressurisation unit low pressure requires to be healthy to allow the pumps to run.

The BMS specialist shall provide all pump software interlocking that would include hardwired interlocks, pump software HOA switch and no existing pump alarm. If any of these are in a fault mode then the pump shall not be able to operate. Where software switches are provided if these are in the "HAND" mode then the pump shall be able to run assuming all hardwired interlocks are healthy. The system shall revert to auto after 4 hours, this time limit is only adjustable in software configuration mode.

The BMS specialist shall provide all chiller hardwired and software interlocking from the rooftop chilled water pump Control Panel CE-R-05A. The hardwired interlocking shall include at least 1 primary chilled water pump running, chiller isolation valve proven open. The software interlocking shall include hardwired interlocking, no existing chiller alarm.

The chillers shall be provided with BMS HOA software switches however it shall be only possible to initiate one chiller only in the hand mode and only if no other chillers are operating. When the switch is in the hand mode the chiller isolation valve shall be opened and the duty pump run at the speed required for one chiller. If the chiller is set to the off mode it shall be removed from the BMS thermal control sequence however, the valve exercise and water quality routine shall remain active. The fascia of the control section shall include control circuit healthy lamp, a system running lamp, a fault lamp and a reset button.

The pump and chiller status and plant HOA switches shall form part of a GUI displayed on an android style backlit colour display panel. This panel shall be mounted on the fascia of the control enclosure shall act as a browser to the embedded graphics held within main plant controller. The plant graphic, which may be the same as the graphic displayed on the BMS head end supervisor, shall be held within the DDC controller and accessed via this web browser from the display panel. The user shall be to manipulate and review the plant status directly through this graphic with a user specific password. Any user shall be able to view the plant status directly through this graphic without any password required. The BMS specialist shall configure for each controller 3 users. User 1 shall have view only access, user 2 shall have the same right as user 1 and be able to access the plant and fan HOA switch, whilst user 3 can access all information using their unique password.

The pumps require a manual speed control when operating in a manual mode. This manual speed control limited to a minimum of 20 Hz shall be available to the user through a user adjustable GUI knob displayed on the BMS head end supervisor and at the pump control panel.

The major alarms when active shall illuminate the panel alarm lamp. When the alarm reset button is operated ALL existing alarms within this local controller shall be cleared.

Each pump shall be user selectable at the BMS supervisor and the pump control panel to operate in the HOA mode by the BMS software switch.

Each pump set shall be provided with a duty/ duty/duty/assist pump selection software switch that rotates the pumps in a cyclic manner through selection at the BMS supervisor or the pump control panel.

The chillers shall be provided with a duty/duty/assist chiller selection software switch that rotates the pumps in a cyclic manner through selection at the BMS supervisor or the rooftop control panel. It should be noted that the air source heat pump will always be retained as the lead device.

All modulating and isolation valves generally operate in auto mode. However, head end and pump Control Panel shall provide the user with manual override of these valves such that they can be permanently closed, open, in automatic mode at any fixed position. When the valves are in any mode of the Automatic these shall be clearly indicated BMS head end supervisor graphic and the pump Control Panel display graphic.

3.19.2 Tenant Cooling

3.19.3 Operation - Tenant Cooling System

The tenant cooling system pumps that operate duty/duty/standby shall be enabled whenever a cooling demand is active, for stage 1 frost protection, water quality routine and if the pump HOA software switch is in the hand or auto mode.

BMS HOA Software

If the pump software switch is in the Hand mode the pump shall run assuming all hardwired interlocks are healthy for (4) hours and revert to auto.

Stage 1 Frost Protection

If the outside air temperature is at stage 1 frost protection then the pump set is enabled. Stage 1 frost protection shall become active if the pump set is off and the outside air temperature is <(3)°C. The pump set shall run in normal pressure control with pump changeover as necessary.

Water Quality Routine

If the water quality routine is active the pump set is enabled and operates under normal pressure control with pump changeover as necessary. The water quality routine selection is held within the pump controller (CE-B2-03A) and transmitted as a flag to all connected AHUs, retail and office plate heat exchanger control panels and the pump bypass valve. These remote control panels shall open fully the associated cooling valve, unless the PHX or AHU is operating in normal mode, or the control valve has been >(50)% open for >(1) hour in the previous (18) hours. The valve remains open until the water quality routine is disabled or the plant is required to operate normally. The water quality routine operate under a fixed time clock that is nominally set for (03.00)am for (1) hour on a daily basis. The calendar is fully adjustable at the BMS head end supervisor however, if the routine has not operated in the previous (72) hours a BMS alarm shall be raised. The water quality routine shall be held off if stage 1 frost protection is active.

Normal Operation

The system cooling demand shall be determined based upon the served valves positions. If any served heat exchanger or any served AHU cooling valve is >(20)% open and in a cooling mode then the duty pump shall be enabled. The cooling demand shall remain active until all served valves are closed for >(5) minutes.

When the system is required to operate the duty pump shall be enabled, assuming all interlocks are healthy, and the pump speed modulated to maintain the differential pressure set point at the least favoured sensor. If both field sensors are out of range then control shall revert to the plant room differential pressure sensor otherwise, this sensor is a monitoring sensor only.

When the duty pump is running at >(90)% BMS output then the assist duty pump shall be enabled, assuming all interlocks are healthy and both pumps run at the same speed. The assist pump shall be disabled if both pumps are running at <(40)% for >(5) minutes. The assist pump shall also be disabled if the measured flow rate is <(X)[3]L/sec. If the duty pump is running at minimum speed and the differential pressure remains above set point then the pump bypass valves shall modulate to maintain the differential pressure set point.
The pump control differential pressure sensors shall have individual automatic adjustable set points. The nominal set point shall be (150)Kpa for the remote sensors and (200)Kpa for the Plantroom mounted sensor. The remote sensors set point shall automatically reset between limits (100 to 200)Kpa, to maintain at least one valve >(80)% open. Whenever the system starts the nominal set point shall be (150)Kpa, after (30) minutes of operation if all AHU cooling valves or cooling exchanger valves are <(70)% open the set point shall be reduced by 10Kpa. If however any valve is >(80)% open the set point shall be increased by (10)Kpa. This resetting shall continue at (30) minute intervals until the end of occupancy, if all valves remain <(70)% open then the set point continues to reduce, if any valve remains above (80)% open then the set point continues to increase.

If the pump is running in the software HOA switch in hand mode then the pump speed shall be the minimum set within the inverter. In this hand mode the pump speed can be modulated between (10 Hz to 50) HZ through a user selectable point on the BMS graphic and at the pump control panel.

If the duty pump fails to operate then the system carries out a duty rotation such that the failed duty pump is now in the standby position.

---

[3] Where X is 85% of the design flow rate of one pump.

The duty pumps rotate on a weekly basis.

Sensor Faults

The control sensors shall be monitored and if out of range then alternative sensors shall be utilised for the control strategy.

- If either remote differential pressure sensor is out of range then it is removed from the pump speed control strategy
- If both remote differential pressure sensors are out of range then pump speed reverts to the plant room differential pressure sensor
- If the outside air temperature sensor is out of range then a temperature of 1°C. shall be assumed.

System Alarms

The BMS shall monitor the system for status and raise alarms on system mismatch with a suitable grace time.

The critical alarms, which shall be indicated on the pump graphic and in the alarm list, illuminate the pump control panel fault lamp and be issued as an email shall be:

- Pump failing to run when commanded on

The maintenance alarms, which shall be indicated on the pump graphic and when in the alarm list shall be:

- Differential pressure sensor out of range
- Differential pressure >(20)Kpa below set point
- Pump speed manually overridden
- Pump in manual control.

Trend Logs

The BMS specialist shall set the following trends to be logged:

- Pump change of state - running/not running
- Pump speed BMS output
- Pump speed feedback from inverter
- Differential pressure set point(s)
- Differential pressure measured value(s)
- System flow temperature. (Dedicated temperature sensor)
- Energy meter CHW entering water temperature
- Energy meter CHW leaving water temperature
- Energy meter CHW flow rate
- Instantaneous coolth energy
- Accumulative coolth energy.

These values shall be set for (15) minute intervals however, the user shall be to adjust these to any reasonable value as a minimum 30 seconds for investigative maintenance routines.

3.19.4 Operation - Landlord Cooling System

The landlord cooling system pumps that operate duty/duty/standby shall be enabled whenever a cooling demand is active, for stage 1 frost protection, water quality routine and if the pump HOA software switch is in the hand or auto mode.

BMS HOA Software

If the pump software switch is in the Hand mode the pump shall run assuming all hardwired interlocks are healthy for (4) hours and revert to auto.

Stage 1 Frost Protection

If the outside air temperature is at stage 1 frost protection then the pump set is enabled. Stage 1 frost protection shall become active if the pump set is off and the outside air temperature is <(3)^{o}C. The pump set shall run in normal pressure control with pump changeover as necessary.

Water Quality Routine

If the water quality routine is active the pump set is enabled and operates under normal pressure control with pump changeover as necessary. The water quality routine selection is held within the pump controller (CE-B2-03B) and transmitted as a flag to all connected AHUs, FCUs and plate heat exchanger control panels and the pump bypass valve. These remote control panels shall open fully the associated cooling valve, unless the PHX, FCU or AHU is operating in normal mode, or the control valve has been >(50)% open for >(1) hour in the previous (18) hours. The valve remains open until the water quality routine is disabled or the plant is required to operate normally. The water quality routine operate under a fixed time clock that is nominally set for (03.00)am for (1) hour on a daily basis. The calendar is fully adjustable at the BMS head end supervisor however, if the routine has not operated in the previous (72) hours a BMS alarm shall be raised. The water quality routine shall be held off if stage 1 frost protection is active.

Normal Operation

The system cooling demand shall be determined based upon the served valves positions. If any served heat exchanger or any served AHU cooling valve is >(20)% open and in a cooling mode then the duty pump shall be enabled. The cooling demand shall remain active until all served valves are closed for >(5) minutes.

When the system is required to operate the duty pump shall be enabled, assuming all interlocks are healthy, and the pump speed modulated to maintain the differential pressure set point at the least favoured sensor. If both field sensors are out of range then control shall revert to the plant room differential pressure sensor otherwise, this sensor is a monitoring sensor only.

When the duty pump is running at >(90)% BMS output then the assist duty pump shall be enabled, assuming all interlocks are healthy and both pumps run at the same speed. The assist pump shall be disabled if both pumps are running at <(40)% for >(5) minutes. The assist pump shall also be disabled if the measured flow rate is <(X)[4]L/sec. If the duty pump is running at minimum speed and the differential pressure remains above set point then the pump bypass valves shall modulate to maintain the differential pressure set point.

The pump control differential pressure sensors shall have individual automatic adjustable set points. The nominal set point shall be (150)Kpa for the remote sensors and (200)Kpa for the Plantroom mounted sensor. The remote sensors set point shall automatically reset between limits (100 to 200)Kpa, to maintain at least one valve >(80)% open. Whenever the system starts the nominal set point shall be (150)Kpa, after (30) minutes of operation if all AHU cooling valves or cooling exchanger valves are <(70)% open the set point shall be reduced by 10Kpa. If however any valve is >(80)% open the set point shall be increased by (10)Kpa. This resetting shall continue at (30) minute intervals until the end of occupancy, if all valves remain <(70)% open then the set point continues to reduce, if any valve remains above (80)% open then the set point continues to increase.

[4] Where X is 85% of the design flow rate of one pump.

If the pump is running in the software HOA switch in hand mode then the pump speed shall be the minimum set within the inverter. In this hand mode the pump speed can be modulated between (10 Hz to 50) HZ through a user selectable point on the BMS graphic and at the pump control panel.

If the duty pump fails to operate then the system carries out a duty rotation such that the failed duty pump is now in the standby position.

The duty pumps rotate on a weekly basis.

Sensor Faults

The control sensors shall be monitored and if out of range then alternative sensors shall be utilised for the control strategy.

- If either remote differential pressure sensor is out of range then it is removed from the pump speed control strategy
- If both remote differential pressure sensors are out of range then pump speed reverts to the plant room differential pressure sensor
- If the outside air temperature sensor is out of range then a temperature of 1°C. shall be assumed.

System Alarms

The BMS shall monitor the system for status and raise alarms on system mismatch with a suitable grace time.

The critical alarms, which shall be indicated on the pump graphic and in the alarm list, illuminate the pump control panel fault lamp and be issued as an email shall be:

- Pump failing to run when commanded on.

The maintenance alarms, which shall be indicated on the pump graphic and when in the alarm list shall be:

- Differential pressure sensor out of range
- Differential pressure >(20)Kpa below set point
- Pump speed manually overridden
- Pump in manual control.

Trend Logs

The BMS specialist shall set the following trends to be logged:

- Pump change of state - running/not running
- Pump speed BMS output
- Pump speed feedback from inverter
- Differential pressure set point(s)
- Differential pressure measured value(s)
- System flow temperature. (Dedicated temperature sensor)
- Energy meter CHW entering water temperature
- Energy meter CHW leaving water temperature
- Energy meter CHW flow rate
- Instantaneous coolth energy
- Accumulative coolth energy.

These values shall be set for (15) minute intervals however, the user shall be to adjust these to any reasonable value as a minimum 30 seconds for investigative maintenance routines.

3.20 Chillers and Primary Pumps

3.20.1 Primary Pumps

The primary pumps run at variable speed to maintain the required flow rate through the open chiller isolation valves. The pumps are enabled whenever a cooling demand is active, for stage 1 frost protection, water quality routine and if the pump HOA software switch is in the hand or auto mode.

BMS HOA Software

If the pump software switch is in the Hand mode the pump shall run assuming all hardwired interlocks are healthy for (4) hours and revert to auto.

Stage 1 Frost Protection

If the outside air temperature is at stage 1 frost protection then the duty pump set is enabled. Stage 1 frost protection shall become active if the pump set is off and the outside air temperature is <(3)^{o}C. The pump set shall run at fixed speed.

Water Quality Routine

If the water quality routine is active the duty pump set is enabled and operates at a fixed speed with pump changeover as necessary. In this mode all boiler isolation valves shall be opened. The water quality routine operate under a fixed time clock that is nominally set for (04.00)am for (1) hour on a daily basis. The calendar is fully adjustable at the BMS head end supervisor however, if the routine has not operated in the previous (72) hours a BMS alarm shall be raised. The water quality routine shall be held off if stage 1 frost protection is active or if the system is running in normal control.

Pump Interlocks

The pumps shall be hardwired interlocked with at least 1 chiller isolation valve proven open, the pressurisation unit low pressure healthy and the separate low-pressure switch either of which require to be healthy before the pump can run. The software interlocks shall include the hardwired interlocks, no existing pump alarm, pump BMS HOA switch in hand or auto, heating system BMS HOA switch in the hand or auto mode.

Normal Operation

The system normal cooling demand shall be active if any of the server systems are in a cooling mode. When the demand is active the lead chiller isolation valve shall be opened and when proven the lead duty primary pump shall be enabled. The lead chiller shall always be the ASHP unless it is in fault or out of auto operation.

The pump shall run at minimum speed of (30)L/sec. This flow rate shall be measured at the primary cooling flow meter and additionally a look up table shall be provided as a fallback to this flow meter.

Required Pumps and Pump Speeds

The pump speeds shall be the greater of the following:

Chiller Isolation Valve Open	System Flow Rate L/sec	Number of Pumps Required	Pump Speed Hz
1 ASHP	30	1	33
2 ASHP + chiller (1)	65	2	36
3 ASHP + chiller (2)	100	3	37
4 ASHP + chiller (3)	135	3	50
1 chiller	35	1	40
2 chiller	70	2	40
3 chiller	105	3	40

If the pump is running from the software HOA switch in hand mode then the pump speed shall be the minimum set within the inverter. In this hand mode the pump speed can be modulated between (10 Hz to 50) HZ through a user selectable point on the BMS graphic and at the pump control panel.

If the duty pump fails to operate then the system carries out a duty rotation such that the failed duty pump is now in the standby position.

The duty pumps rotate on a weekly basis.

Sensor Faults

The control sensors shall be monitored and if out of range then alternative sensors shall be utilised for the control strategy.

- If the outside air temperature sensor is out of range then a temperature of 1°C. shall be assumed
- If the flow meter is out of range use the look up table.

System Alarms

The BMS shall monitor the system for status and raise alarms on system mismatch with a suitable grace time.

The critical alarms, which shall be indicated on the pump graphic and in the alarm list, illuminate the pump control panel fault lamp and be issued as an email shall be:

- Pump failing to run when commanded on.

The maintenance alarms, which shall be indicated on the pump graphic and when in the alarm list shall be:

- Flow rate >(10)L/sec below set point. Only active if the flowmeter is active
- Pump speed manually overridden
- Pump in manual control.

Trend Logs

The BMS specialist shall set the following trends to be logged:

- Pump change of state - running/not running
- Pump speed BMS output
- Pump speed feedback from inverter
- Required system flow rate
- Measured system flow rate
- System flow temperature. (Dedicated temperature sensor)
- System return temperature (dedicated temperature sensor)
- Energy meter CHW entering water temperature
- Energy meter CHW leaving water temperature
- Energy meter CHW flow rate
- Instantaneous heat energy
- Accumulative heat energy.

These values shall be set for (15) minute intervals however, the user shall be to adjust these to any reasonable value as a minimum 30 seconds for investigative maintenance routines.

3.20.2 Chillers

The chillers are enabled whenever cooling is required. Cooling is required if the server systems are in a cooling demand, or if the cooling system BMS HOA switch is in the hand mode. In the hand mode the system runs for (4) with normal thermal control returning to auto control.

The lead chiller, which shall always be the air source heat pump unless it is not available, is enabled when cooling is required, and all interlocks are healthy. The chiller hardwired interlocks include, at least one primary pump running, chiller isolation valve proven open.

When the chiller is required to run the chiller isolation valve is opened and the primary pump speed set to the required value.

When all interlocks are healthy the lead chiller is enabled and shall remain enabled throughout the entire cooling demand period.

If the flow temperature of any served system is >(2)°C. above set point then an additional chiller shall be enabled in the same manner as the lead chiller. The new chiller isolation valve shall be opened, and the primary pump set speed increased, when all interlocks are healthy the new chiller shall be enabled. Additional chillers shall be added if the distribution flow temperatures are >(2)°C. above set point or the temperature in the low loss header between the flows and returns measured at [6010/TIX/1/6] is >(2)°C. above the primary flow temperature measured at [6010/TIX/1/5].

Chillers shall be disabled in sequence and after a minimum run time of (5) minutes if the flow rate in the primary circuit is >(40)[5]L/sec higher than the combined flow rates in the secondary circuit. Chillers shall also be disabled in sequence if the common chiller return temperature measured at [6010/TIX/1/7] is >(10)°C. chillers shall also be disabled in sequence if any chiller is running at a cooling rate <(30)% for >(5) minutes.

Chillers shall have a minimum run time of (5) minutes and a minimum off time of (15) minutes.

When chillers require to be disabled the chiller shall be disabled and the isolation valve remaining open for a further (5) minutes after which the valve shall be closed, and the primary pump speed reduced to suit the new number of chiller valves required to be opened.

Chillers shall be monitored for status by the BMS and if in a fault mode or if enabled and the flow temperature is >(10)°C. shall be assumed to be in a fault mode. Chillers in a fault mode shall be disabled and removed from the control strategy.

Sensor Faults

The control sensors shall be monitored and if out of range then alternative sensors shall be utilised for the control strategy.

- If any secondary flow temperature sensor is out of range then it shall be removed from the control strategy
- If the neutral point low loss header temperature sensor [6010/TIX/1/6] is out of range it shall be removed from the control strategy
- If the common chiller return temperature sensor [6010/TIX/1/7] is out of range it shall be removed from the control strategy
- If the heat meter flow rate is out of range it shall be removed from the control strategy. Chiller sequencing ON shall revert to the neutral point low loss header temperature sensor, or any secondary system flow temperature sensor. Chiller sequencing OFF shall revert to the common chiller return temperature sensor and/or the chiller firing rate whichever is the smaller demand
- If a secondary heat meter flow rate is out of range it shall be removed from the control strategy. Chiller sequencing ON shall revert to the neutral point low loss header temperature sensor or any secondary system flow temperature. Chiller

[5] Value is 110% of the chiller design flow rate.

sequencing OFF shall revert to the common chiller return temperature sensor and/or the chiller firing rate whichever is the smaller demand.

System Alarms

The BMS shall monitor the system for status and raise alarms on system mismatch with a suitable grace time.

The critical alarms, which shall be indicated on the pump graphic and in the alarm list, illuminate the pump control panel fault lamp and be issued as an email shall be:

- Two pumps failing to run when commanded on
- Chiller common flow temperature >(12)ºC. in a cooling mode.

The maintenance alarms, which shall be indicated on the pump graphic and when in the alarm list shall be:

- Chiller fault
- Temperature sensor out of range
- Flow meter out of range
- Chiller isolation valve failed to open when commanded
- Chiller isolation valve failed to close when commanded.

Trend Logs

The BMS specialist shall set the following trends to be logged:

- Chiller firing rate
- Chiller leaving temperature
- Primary system flow temperature
- Primary system return temperature
- Primary system low loss header neutral temperature
- Pump change of state - running/not running
- Energy meter CHW entering water temperature
- Energy meter CHW leaving water temperature
- Energy meter CHW flow rate
- Instantaneous heat energy
- Accumulative heat energy.

These values shall be set for (15) minute intervals however, the user shall be to adjust these to any reasonable value as a minimum 30 seconds for investigative maintenance routines.

3.20.3 Landlord CHW Pressurisation Unit and Water Treatment

The LTHW pressurisation unit and water treatment systems shall be powered from the BMS provided control panels and monitor the status by the BMS.

The pressurisation unit low pressure shall be wired in parallel with a separate low-pressure switch which require to be healthy before the associated pump sets can run.

The make-up water to the pressurisation unit shall be provided with a flowmeter complete with M-bus connectivity that shall be connected to the sitewide BMS/EMS.

System Alarms

The BMS shall monitor the system for status and raise alarms on system mismatch with a suitable grace time.

The maintenance alarms, which shall be indicated on the pump graphic and when in the alarm list shall be:

- CHW pressurisation unit common fault including high pressure
- CHW pressurisation unit low pressure
- CHW separate pressure switch low-pressure. [one on the roof and one in the basement]
- Water treatment system fault(s).

3.21 Tenant Heating & Cooling System

The tenant office heating/cooling is provided from plate heat exchanger units with tenant side duty/standby pump sets operating at variable volume with flow temperature controlled by the primary side landlord 2 port modulating PICV.

The systems are enabled whenever heating or cooling is required during which time the flow temperature is achieved by modulation of the primary side control valves. The pumps are enabled without heating or cooling for water flush routines.

Heating is provided to the demands of the tenants optimiser with occupancy, warm up and low space temperature protection. Cooling is provided for occupancy and high space temperature protection.

The primary side of the plate heat exchanger is provided with an MID approved heat meter form part of the tenant billing system.

Each tenant is provided with a single BMS control panel that controls and manages the heating/cooling systems, the controller additionally monitors local space air conditions, it is the floor master controller for the fan coil units and has inputs for local monitoring of water leak detection systems, plant extension buttons and pulse water meters.

3.21.1 Controls Hardware

The BMS specialist shall provide a form 2B type 2 mechanical services power boards and form 1 control panel for each tenant heat exchanger unit

The power section shall contain MID approved electrical meter that may be Din rail mounted should monitor the status of the heating & cooling pumps allowing energy to be determined for each system.

The system shall be controlled by the BMS supplied DDC web enabled controller that communicates to the sitewide BMS via the converged network utilising BACnet/IP. The controller is held within a non-door interlocked section of the control panels and is provided with a backlit colour display mounted on the fascia of the panel.

The BMS controller shall provide the complete control to the tenant services. This will include the BACnet/MSTP network for the tenant fan coil units and the commands to the fan coils to operate in various modes, including the maintenance routine.

The controller shall contain the tenant optimiser, it shall monitor the local space air conditions and have inputs for plant extension and monitoring services such as water leak detection.

The controller shall send commands to the appropriate VAV air terminal unit for operation in the occupancy and purge mode, the commands shall be sent additionally to the appropriate air handling plant to initiate plant operation.

The controller shall monitor and manage the fan coil unit operation determining valve positions which in turn shall be used to initiate local and central plant heating and cooling systems.

The controller shall control and manage the landlord primary side heating cooling valves to achieve the required tenant side flow temperature with override as appropriate on high temperature returns in the heating system.

The controller shall control and manage the tenants side heating and cooling pumps for enable, monitoring and speed control.

The pumps shall be hardwire interlocked with a separate low-pressure switch that requires to be healthy for the pump set to run.

The BMS specialist shall provide all pump software interlocking that would include hardwired interlocks, pump software HOA switch and no existing pump alarm. If any of these are in a fault mode then the pump shall not be able to operate. Where software switches are provided if these are in the "HAND" mode then the pump shall be able to run assuming all hardwired interlocks are healthy. The system shall revert to auto after 4 hours, this time limit is only adjustable in software configuration mode.

The fascia of the control section shall include control circuit healthy lamp, a heating/cooling system running lamp, a fault lamp and a reset button.

The pump status HOA switches shall form part of a GUI displayed on an android style backlit colour display panel. This panel shall be mounted on the fascia of the control enclosure shall act as a browser to the embedded graphics held within main plant controller. The plant graphic, which may be the same as the graphic displayed on the BMS head end supervisor, shall be held within the DDC controller and accessed via this web browser from the display panel. The user shall be to manipulate and review the plant status directly through this graphic with a user specific password. Any user shall be able to view the plant status directly through this graphic without any password required. The BMS specialist shall configure for each controller 3 users. User 1 shall have view only access, user 2 shall have the same right as user 1 and be able to access the plant and fan HOA switch, whilst user 3 can access all information using their unique password.

The pumps require a manual speed control when operating in a manual mode. This manual speed control limited to a minimum of 20 Hz shall be available to the user through a user adjustable GUI knob displayed on the BMS head end supervisor and at the pump control panel.

The major alarms when active shall illuminate the panel alarm lamp. When the alarm reset button is operated ALL existing alarms within this local controller shall be cleared.

Each pump shall be user selectable at the BMS supervisor and the pump control panel to operate in the HOA mode by the BMS software switch.

The distribution pump set shall be provided with a duty/standby pump selection software switch that rotates the pumps in a cyclic manner through selection at the BMS supervisor or the pump control panel.

The BMS specialist shall provide MID approved heat meters communicating BACnet/MSTP and connect this to the EMS. The energy and flow/temperature values shall be displayed on the appropriate system graphic and separately on energy display graphic.

The user display screen shall allow the status of the fan coil units to be reviewed and all parameters reset as described in 3.4 Office Air Conditioning

The user display screen shall allow the status of the VAV unit to brew viewed and parameters reset as described in 3.5 Office Ventilation.

The BMS specialist shall install the air quality sensors :CO2, VOC, PM 2.5 on the core walls, these can be a combined device or separate units. The space temperature sensor utilised for the optimiser shall be installed on an external wall of the office.

The BMS specialist shall provide dynamic graphics for the heat meters with information being shown on these specific tenant graphic. In addition heat metering graphic shall be provided that shall show in a tabular form all of the office tenant heat meters.

3.21.2 System Operation

The tenant heating system pumps that operate duty/standby shall be enabled whenever a heating demand is active, water quality routine and if the pump HOA software switch is in the hand or auto mode.

The tenant cooling system pumps that operate duty/standby shall be enabled whenever a heating demand is active, water quality routine and if the pump HOA software switch is in the hand or auto mode.

BMS HOA Software

If the pump software switch is in the Hand mode the pump shall run assuming all hardwired interlocks are healthy for (4) hours and revert to auto.

Water Quality Routine

If the tenants heating water quality routine is active the pump set is enabled and operates under normal pressure control with pump changeover as necessary. When the routine is active all fan coil heating valves shall be driven fully open. The water quality routine operate under a fixed time clock that is nominally set for (01.00)am for (1) hour on a daily basis. The calendar is fully adjustable at the BMS head end supervisor however, if the routine has not operated in the previous (72) hours a BMS alarm shall be raised. The water quality routine shall be held off if the primary side heating valve is open.

If the tenants cooling water quality routine is active the pump set is enabled and operates under normal pressure control with pump changeover as necessary. When the routine is active all fan coil cooling valves shall be driven fully open. The water quality routine operate under a fixed time clock that is nominally set for (01.30)am for (1) hour on a daily basis. The calendar is fully adjustable at the BMS head end supervisor however, if the routine has not operated in the previous (72) hours a BMS alarm shall be raised. The water quality routine shall be held off if the primary side cooling valve is open.

The landlord primary side heating/cooling PICV is opened if the central plant water flush routine flag is active. However, the valve will remain closed if the control valve has been >(50)% open for >(1) hour in the previous (18) hours.

Normal Operation

The system heating/cooling demand shall be determined based upon the served valves positions. See 0 Heating/Cooling Demands.

When the heating demand is active the duty heating pump shall be enabled, assuming all interlocks are healthy and run at variable speed to maintain the system differential pressure set point. The differential pressure set point shall be user adjustable between limits (50 to 150)Kpa.

When the cooling demand is active the duty cooling pump shall be enabled, assuming all interlocks are healthy and run at variable speed to maintain the system differential pressure set point. The differential pressure set point shall be user adjustable between limits (50 to 150)Kpa.

The primary side heating valve shall be modulated to maintain the secondary office flow temperature set point. The set point shall have two user selectable units, a toggle switch shall be provided on the BMS supervisor and at the floor tenant master controller display panel to select either control strategy. This shall be either a constant temperature that is adjustable at the head end and the master controller display screen between limits (60 to 75)^{o}C OR a variable temperature that is dependent on outside air temperature (To <5°C. Ts 75°C. : To >15°C. Ts 45°C.).

If the flow temperature sensor is out of range the primary valve shall be controlled to maintain the secondary side return temperature with the heating set point of (45)^{o}C. and the cooling set point of (12)^{o}C.

if the office tenant side return water temperature is >(45)°C. then the primary side valve position shall be overridden to maintain a maximum 45°C tertiary return temperature. However the flow temperature set point shall always take precedent.

The primary side cooling valve shall be modulated to maintain the secondary office flow temperature set point. The set point that is adjustable at the head end and the master controller display screen between limits (6 to 15)°C.

If the pump is running in the software HOA switch in hand mode then the pump speed shall be the minimum set within the inverter. In this hand mode the pump speed can be modulated between (10 Hz to 50) HZ through a user selectable point on the BMS graphic and at the pump control panel.

If the duty pump fails to operate then the system carries out a duty rotation such that the failed duty pump is now in the standby position.

The duty pumps rotate on a weekly basis.

3.21.3 Global Commands

The BMS specialist shall provide global command signals that can be used by the commissioning and FM team to reset control parameters in the floor master controller by a single keystroke. The last command shall always take precedent.

Command To All Office Tenant Floor Master Controllers

- Set all primary side heating valves to automatic/off/hand control. In the automatic mode the valve shall modulate to the demand from the fan coil units and the optimiser, in the hand mode the valve shall be in the user selected fixed position it shall revert to auto after (4) hours in the off mode the valve shall remain closed however water quality routines shall be retained
- Set all primary side cooling valves to automatic/off/hand control. In the automatic mode the valve shall modulate to the demand from the fan coil units and the optimiser, in the hand mode the valve shall be in the user selected fixed position it shall revert to auto after (4) hours in the off mode the valve shall remain closed however water quality routines shall be retained
- set all primary side heating valves to any fixed position. - NB the flushing routine shall always open these valves fully and at the end of the routine returning to the user defined fixed position
- Set all primary side cooling valves to any fixed position. - NB the flushing routine shall always open these valves fully and at the end of the routine returning to the user defined fixed position
- Set all secondary side heating control to fixed temperature. With nominal set point user selected
- Set all secondary side heating control to variable temperature
- Set all secondary side cooling control to fixed temperature. With nominal set point user selected
- Set all secondary side heating pumps to auto/off/hand control. - NB if in hand control the revert to auto after 4 hours
- Set all secondary side cooling pumps to auto/off/hand control. - NB if in hand control the revert to auto after 4 hours.

Command To Individual Office Tenant Floor Master Controllers

- Set the primary side heating valve to automatic/off/hand control. In the automatic mode the valve shall modulate to the demand from the fan coil units and the optimiser, in the hand mode the valve shall be in the user selected fixed position it shall revert to auto after (4) hours in the off mode the valve shall remain closed however water quality routines shall be retained
- Set the primary side cooling valve to automatic/off/hand control. In the automatic mode the valve shall modulate to the demand from the fan coil units and the optimiser, in the hand mode the valve shall be in the user selected fixed position it shall revert to auto after (4) hours in the off mode the valve shall remain closed however water quality routines shall be retained

- set all primary side heating valve to any fixed position. - NB the flushing routine shall always open these valves fully and at the end of the routine returning to the user defined fixed position
- Set all primary side cooling valve to any fixed position. - NB the flushing routine shall always open these valves fully and at the end of the routine returning to the user defined fixed position
- Set the secondary side heating control to fixed temperature. With nominal set point user selected
- Set the secondary side heating control to variable temperature
- Set the secondary side cooling control to fixed temperature. With nominal set point user selected
- Set the secondary side heating pumps to auto/off/hand control. - NB if in hand control the revert to auto after 4 hours
- Set the secondary side cooling pumps to auto/off/hand control. - NB if in hand control the revert to auto after 4 hours.

3.21.4 Sensor Faults

The control sensors shall be monitored and if out of range then alternative sensors shall be utilised for the control strategy.

- If the differential pressure sensor is out of range then it is removed from the pump speed control strategy and the pump runs at a fixed (40)Hz
- If the room optimiser air temperature sensor is out of range then a temperature of 16°C. shall be assumed
- If the secondary side flow temperature sensor is out of range the control shall revert to secondary side return temperature fixed set point of (12)^{o}C. for the cooling and (45)^{o}C. for the heating.

3.21.5 System Alarms

The BMS shall monitor the system for status and raise alarms on system mismatch with a suitable grace time.

The critical alarms, which shall be indicated on the pump graphic and in the alarm list, illuminate the pump control panel fault lamp and be issued as an email shall be:

- Pump failing to run when commanded on.

The maintenance alarms, which shall be indicated on the pump graphic and when in the alarm list shall be:

- Differential pressure sensor out of range
- Pump speed manually overridden
- Pump in manual control
- temperature sensor out of range
- Water leak detection active.

3.21.6 Trend Logs

The BMS specialist shall set the following trends to be logged:

- Pump change of state - running/not running
- Pump speed BMS output
- Pump speed feedback from inverter
- Differential pressure set point(s)
- Differential pressure measured value(s)

- System flow temperature
- System return temperature
- primary side heating valve position
- Primary side cooling valve position
- Energy meter entering water temperature
- Energy meter leaving water temperature
- Energy meter flow rate
- Instantaneous heat energy
- Accumulative heat energy
- PM2.5
- VOC
- CO2
- Space temperature.

These values shall be set for (15) minute intervals however, the user shall be to adjust these to any reasonable value as a minimum 30 seconds for investigative maintenance routines.

3.22 Retail Tenant Heating and Cooling

The retail space heating/cooling is provided from plate heat exchanger units with future tenant side provided pump sets.

The systems are enabled whenever heating or cooling is required during which time the tenant side flow temperature is achieved by modulation of the primary side control valves. The BMS software shall have include FM user selectable control strategy and makes use of either the tenant side flow temperature or the landlord side return temperature. If landlord return temperature is used then the control valve is limited to 90% closed.

Heating, cooling and ventilation will be provided to the retail space based on a landlord time clock and a demand being active from the tenant.

The primary side of the plate heat exchanger is provided with an MID approved heat meter form part of the tenant billing system.

Each tenant is provided with a single BMS control panel that controls and manages the heating/cooling systems, the controller additionally has inputs for local monitoring of water leak detection systems and pulse water meters.

3.22.1 Controls Hardware

The BMS specialist shall provide a form 2B type 2 mechanical services power boards and form 1 control panel for each retail tenant heat exchanger unit. The heat exchange unit should include the heating and cooling heat exchangers.
The system shall be controlled by the BMS supplied DDC web enabled controller that communicates to the sitewide BMS via the converged network utilising BACnet/IP. The controller is held within a non-door interlocked section of the control panels and is provided with a backlit colour display mounted on the fascia of the panel.

The controller shall monitor the tenant hardwired demands and use these in conjunction with the landlord time clock to initiate the heating, cooling and ventilation to the space.
The controller shall control and manage the landlord primary side heating cooling valves to achieve the required tenant side flow temperature with override as appropriate on high temperature returns in the heating system.

The fascia of the control section shall include control circuit healthy lamp.

The major alarms when active shall illuminate the panel alarm lamp. When the alarm reset button is operated ALL existing alarms within this local controller shall be cleared.

The user display screen shall allow the status of the plate heat exchanger control system, the tenant demands and user adjustments.

The BMS specialist shall provide dynamic graphics for the heat meters with information being shown on these specific tenant graphic. In addition heat metering graphic shall be provided that shall show in a tabular form all of the office tenant heat meters.

3.22.2 System Operation

The DDC controller shall monitor remote hardwired points controlled by the tenant that when active will call for either heating, cooling or ventilation as appropriate. However, an overarching landlord time clock shall be provided with fully adjustable calendar, and this requires to be active in conjunction with the tenant demands before the heating cooling and ventilation systems are enabled.

Water Quality Routine

If the landlord heating water quality routine is active the landlord primary side heating valve shall be open fully. This demand is held CE-B2-01A and transmitted as appropriate. The valve is held fully open during the water quality routine unless the control valve has been >(50)% open for >(1) hour in the previous (18) hours, or the system is operating in normal control

If the landlord cooling water quality routine is active the landlord primary side heating valve shall be open fully. This demand is held CE-B2-03A and transmitted as appropriate. The valve is held fully open during the water quality routine unless the control valve has been >(50)% open for >(1) hour in the previous (18) hours, or the system is operating in normal control.

Normal Operation

If the landlord time clock is active and a heating demand is received in the primary side heating valve shall be modulated to achieve the required set point. The set point control strategy is user selectable by the FM team at the BMS head end supervisor and at the retail control panel.

The desired strategy shall utilise the retail flow temperature to modulate the primary side heating valve to achieve the flow temperature set point that is user adjustable between limits (60 to 75)^{o}C. At the BMS head end supervisor and at the retail control panel. This strategy however requires that the flow temperature sensor on the secondary side is installed and that the tenant pumps are operational. If the landlord primary return temperature is >(45)^{o}C. then the valve position is overridden to maintain the nominal 45°C. return water temperature. However, the flow temperature control will always take precedent.

If the flow temperature sensor is out of range the primary valve shall be controlled to maintain the secondary side return temperature with the heating set point of (45)^{o}C. and the cooling set point of (12)^{o}C.

As a temporary measure and If the flow temperature sensor is not installed the FM team can select primary heating return temperature control strategy. If this strategy is selected then the primary side heating valve is modulated to achieve the return water set point that is user adjustable between limits (40 to 45)^{o}C. When this strategy is selected the heating valve modulation shall be limited such that it never closes more than (90)%.
If the landlord time clock is active and a cooling demand is received then the primary side cooling valve shall be modulated to achieve the required set point. The set point control strategy is user selectable by the FM team at the BMS head end supervisor and at the retail control panel.

The desired strategy shall utilise the retail flow temperature to modulate the primary side cooling valve to achieve the flow temperature set point that is user adjustable between limits (6 to 15)^{o}C. At the BMS head end supervisor and at the retail

control panel. This strategy however requires that the flow temperature sensor on the secondary side is installed and that the tenant pumps are operational.

As a temporary measure and If the flow temperature sensor is not installed the FM team can select primary chilled water return temperature control strategy. If this strategy is selected then the primary side cooling valve is modulated to achieve the return water set point that is user adjustable between limits (12 to 15)^{o}C. When this strategy is selected the cooling valve modulation shall be limited such that it never closes more than (90)%.

3.22.3 Global Commands

The BMS specialist shall provide global command signals that can be used by the commissioning and FM team to reset control parameters in the retail controller by a single keystroke. The last command shall always take precedent.

Command To All Retail Tenant Floor Master Controllers

- Set all primary side heating valves to automatic/off/hand control. In the automatic mode the valve shall modulate to the demand from the tenant heating demand but only when the landlord time clock is active. In the hand mode the valve shall be in the user selected fixed position it shall revert to auto after (4) hours in the off mode the valve shall remain closed however water quality routines shall be retained
- Set all primary side cooling valves to automatic/off/hand control. In the automatic mode the valve shall modulate to the demand from the tenant cooling demand but only when the landlord time clock is active, in the hand mode the valve shall be in the user selected fixed position it shall revert to auto after (4) hours in the off mode the valve shall remain closed however water quality routines shall be retained
- set all primary side heating valves to any fixed position. - NB the flushing routine shall always open these valves fully and at the end of the routine returning to the user defined fixed position
- Set all primary side cooling valves to any fixed position. - NB the flushing routine shall always open these valves fully and at the end of the routine returning to the user defined fixed position
- Set all secondary side heating control to fixed temperature. With nominal set point user selected
- Set all secondary side cooling control to fixed temperature. With nominal set point user selected
- Select secondary side temperature control routine
- Select primary side temperature control routine.

Command to Individual Office Tenant Floor Master Controllers

- Set the primary side heating valve to automatic/off/hand control. In the automatic mode the valve shall modulate to the demand from the tenant heating demand but only when the landlord time clock is active. In the hand mode the valve shall be in the user selected fixed position it shall revert to auto after (4) hours in the off mode the valve shall remain closed however water quality routines shall be retained
- Set the primary side cooling valve to automatic/off/hand control. In the automatic mode the valve shall modulate to the demand from the tenant cooling demand but only when the landlord time clock is active, in the hand mode the valve shall be in the user selected fixed position it shall revert to auto after (4) hours in the off mode the valve shall remain closed however water quality routines shall be retained
- set the primary side heating valve to any fixed position. - NB the flushing routine shall always open these valves fully and at the end of the routine returning to the user defined fixed position
- Set all primary side cooling valve to any fixed position. - NB the flushing routine shall always open these valves fully and at the end of the routine returning to the user defined fixed position
- Set the secondary side heating control to fixed temperature. With nominal set point user selected
- Set the secondary side cooling control to fixed temperature. With nominal set point user selected

- Select secondary side temperature control routine
- Select primary side temperature control routine.

3.22.4 Sensor Faults

The control sensors shall be monitored and if out of range then alternative sensors shall be utilised for the control strategy.

- If the secondary side flow temperature sensor is out of range, select primary side temperature control routine.

3.22.5 System Alarms

The BMS shall monitor the system for status and raise alarms on system mismatch with a suitable grace time.

The critical alarms, which shall be indicated on the PHX graphic and in the alarm list, illuminate the pump control panel fault lamp and be issued as an email shall be:

- Secondary flow heating temperature >(5)^{o}C. below set point
- Secondary chilled water flow temperature >(3)^{o}C. above set point.

The maintenance alarms, which shall be indicated on the pump graphic and when in the alarm list shall be:

- Temperature sensor out of range.

3.22.6 Trend Logs

The BMS specialist shall set the following trends to be logged:

- Secondary System flow temperature
- Secondary system return temperature
- Primary side heating valve position
- Primary side cooling valve position
- Energy meter entering water temperature
- Energy meter leaving water temperature
- Energy meter flow rate
- Instantaneous heat energy
- Accumulative heat energy.

These values shall be set for (15) minute intervals however, the user shall be to adjust these to any reasonable value as a minimum 30 seconds for investigative maintenance routines.

3.23 Gas and CO Detection System

The natural gas detection and carbon monoxide monitoring system shall be installed in the boiler house with sensors above the gas train. Separate natural gas sensors shall be mounted in the gas meter room and wired back to this gas detection panel.

The system shall be complete with a local UPS that will support the detection system in the event of power failure. The gas valve shall close, and an alarm is raised if the gas or CO2 system is in detected alarm fault, if the safety knock off buttons have been activated or if the fire alarm is active.

The boiler safety circuit shall be hardwired interlocked with the healthy gas and CO2 detection system.

3.23.1 Controls Hardware

The BMS specialist shall provide and install the 8 point gas detection system with 2 point CO monitoring sensors. The gas sensors shall be located in the boiler house with one sensor located in the gas meter room.

The gas detection system shall form part of the boiler safety circuit housed within CE-B2-01C.

The BMS specialist shall provide the gas valve that shall be hardwired interlocked with the gas safety circuit and shall include pressure differential sensors proving downstream integrity prior to allowing the gas valve to open.

The BMS specialist shall provide an alarm lamp outside of the boiler house doors and outside of the gas meter room powered from the gas/ CO detection panel that shall be illuminated if gas is detected.

3.23.2 System Operation

The system shall be active continuously and hardwired interlocked with the boiler safety circuit.

3.23.3 System Alarms

The BMS shall monitor the system for status and raise alarms on system mismatch with a suitable grace time.

The critical alarms, which shall be indicated on the boiler graphic and in the alarm list, illuminate the pump control panel fault lamp and be issued as an email shall be:

- Gas detected
- Carbon monoxide detected
- System fault.

3.24 Trace Heating Systems

The MEP specialist shall provide trace heating systems complete with thermostats and integral controls. The BMS specialist shall provide power from the local BMS power boards to an isolator from which the MEP specialist shall carry out all further power wiring controls installation.

The BMS shall monitor the trace heating control panels for fault and raise maintenance alarm when active.

3.25 Heat Maintenance Tape

The MEP specialist shall provide heat maintenance tape with self-regulating system. The tape shall be powered from local distribution boards with the MCB monitored by the sitewide BMS.

The BMS shall monitor the trace heating control panels for fault and raise maintenance alarm when active

3.26 Accessible Toilet Alarm System

The MEP specialist shall provide the accessible toilet alarm system that shall be monitored for alarm fault by the BMS.

3.27 Refuge Alarm System

The MEP specialist shall provide the refuge alarm system that shall be monitored for alarm fault by the BMS.

3.28 Firefighting Staircase Smoke Control System

The MEP specialist shall provide the firefighting staircase smoke control system that shall comprise fans on the roof and at level 5. These shall be controlled and managed by the specialist supplier system complete with power control panels, inverters and all interconnecting controls and power wiring.

The specialist shall provide power and controls wiring to BS 8519 category 3.

The BMS shall monitor the status of the smoke control system through hardwired interlocks and high-level interface.

The high-level interface shall include all field and virtual points associated with the smoke control system such as these can be displayed as a dynamic graphic on the BMS head end supervisor. The BMS specialist shall generate graphics, but they shall be certified and agreed by the specialist supplier during testing witnessing and commissioning.

3.29 Smoke Damper Control System

The smoke damper control system shall be provided and set to work by a specialist supplier and as described in the mechanical specification.

The smoke damper control system shall be connected to the fire alarm system via hardwired relays that shall describe the zone in which the fire is active.
The smoke damper control system shall include a fire rated network connected to the damper interface units that shall be mounted alongside all motorised dampers and/or the BMS panel as appropriate.

Where field smoke isolation dampers are required to be multi position (i.e. used for normal ventilation when semi-closed and fully open for smoke extract) then these shall be 24 Volt type with the transformer provided by the smoke damper control specialist. The smoke damper control specialist shall also provide the local (0 to 10)V controlling device that is used to position these multiposition dampers.

The motorised smoke dampers associated directly with the fan systems (i.e. those that have to be proven open before the fan can run) shall be marshalled through the BMS control panel. The smoke damper control system shall send commands to open the damper and receive open status back via interlocking relays in the BMS control panel. This shall allow the damper to be opened locally by the BMS for general testing and commissioning purposes.

The motorised smoke dampers that are field mounted shall be 240 V powered and are controlled directly by the smoke damper control system. This power feed shall emanate from life safety back distribution boards and the power wiring shall be category 3.

The damper actuators shall be provided with open and close indication that can be monitored by the smoke damper control system.
Generally in a fire mode the fire signal shall be sent to the BMS panel at which point any BMS operation will be ceased. The smoke damper control system shall when necessary send the fan required signal to the BMS panel which shall be interpreted by the BMS control panel as requiring the associated damper to be opened and when the end switches are made the appropriate fan shall run. The operation of the fans in the fire/smoke mode shall all be via hardwired logic within the BMS control panel.

The BMS control panel shall be provided with hardwired volt free contacts that can be monitored by the smoke damper control system or the fire alarm system to indicate: any smoke fan operating, any smoke fan fault.

The fan status (operating/fault) shall generally be determined from hardwired outputs from the fan inverter.

The smoke extract fans that are controlled by the BMS panel shall be required to operate at various speeds dependent upon the zone of incident. To achieve this the smoke damper control system shall provide separate input/output modules

alongside the BMS panel to indicate the zone of incidents. These modules shall be powered from the BMS panel (which is itself ATS backed). Within the BMS control panel Boolean relay logic shall be used in conjunction with the 3 inputs on the fan inverter to select up to 4 fan speeds.

The BMS power to these input/output modules shall be made using category 3 cabling.

3.30 Smoke Damper Monitoring System

The contractor shall provide the smoke damper monitoring system as an indicator panel complete with lamps and user switches located in the FCC.

This damper panel shall display the status (open/closed) of each individual smoke damper to indicate the status (running/fault) of each individual fan system.

The smoke damper monitoring system shall be provided with a BACnet output that will be connected to the sitewide BMS that shall show the status of every damper actuator across the project. The BMS specialist shall provide a dynamic graphic showing these damper status.

3.31 Generator

The MEP specialist shall provide and set to work the generator and all associated oil systems. The generator and oil system shall be monitored by the sitewide BMS through hardwired connections to the generator and via a high-level interface to the generator control system.

This interface shall allow the BMS specialist to provide dynamic graphics showing the status of the generator and oil system. These graphics shall be certified an agreed by the specialist supplier during testing, witnessing and commissioning.

3.32 Domestic Cold Water Distribution System

The domestic cold water system storage tanks located in the basement distribute wholesome water via packaged cold water booster sets. Incoming water from the mains is provided with major water leak detection systems and backwash filter all of which shall be monitored by the sitewide BMS.

The cat 5 system is provided with storage tank and booster set.

3.32.1 Controls Hardware

The MEP specialist shall provide a domestic booster set and storage tank in the basement plant room space. The booster set shall be provided with integral controls and the tank with a Tanktronic type unit.
The wholesome booster set, and storage tank and local water treatment systems shall be provided with control sensors and monitoring by the BMS specialist. The BMS specialist shall provide immersion temperature sensors for both sections of the tanks and ultrasonic level meters that shall be used to calculate the stored volume.

The cat 5 booster set, and storage tank shall be provided with control sensors and monitoring by the package unit.

The BMS specialist shall provide a form 2B type 2 mechanical services power boards and form 1 control panel for the public health services in the tank room.

The BMS specialist shall provide all controls interlocking cabling between the potable Tanktronic unit, the tank level switches the MEP provided solenoid valves and the booster set. The booster set shall be disabled through hardwired interlocks on low water level in the storage tanks.

The BMS specialist shall provide all controls interlocking cabling between the cat 5 Tanktronic unit, the tank level switches the MEP provided solenoid valves and the booster set. The cat 5 booster set shall be disabled through hardwired interlocks on low water level in the storage tanks.

The systems shall be monitored by the BMS supplied DDC web enabled controller that communicates to the sitewide BMS via the converged network utilising BACnet/IP. The controller is held within a non-door interlocked section of the control panels and is provided with a backlit colour display mounted on the fascia of the panel.

The MEP specialist shall provide WRAS approved water meters and the major water leak detection system. The water meters shall be provided with M-bus connectivity by the BMS specialist which shall be connected to the sitewide BMS/EMS forming part of the energy monitoring and billing system.

3.32.2 System Operation

The potable booster set shall be available for operation continuously however these shall be hardwired interlocked with low-level switches in both section of the tank to prevent dry operation of the booster set.
The potable mains water solenoid valves shall be closed through hardwired interlocks if the Tanktronic high level alarm is active.

The cat 5 booster set shall be available for operation continuously however these shall be hardwired interlocked with low-level switches in both section of the tank to prevent dry operation of the booster set.
The Cat 5 mains water solenoid valves shall be closed through hardwired interlocks if the Tanktronic high level alarm is active.

The water treatment systems shall be provided integral control and operate continuously.

System Alarms

The BMS shall monitor the system for status and raise alarms on system mismatch with a suitable grace time. The critical alarms, which shall be indicated on the domestic water graphic and in the alarm list, illuminate the pump control panel fault lamp and be issued as an email shall be:

- Major water leak detection
- Potable Tank low level
- Cat 5 tank low level
- Potable tank high level alarm
- Cat 5 tank high level alarm.

The maintenance alarms, which shall be indicated on the pump graphic and when in the alarm list shall be:

- Booster set fault
- Tank temperature >(25)^{o}C
- Tanktronic unit alarm.

3.33 Rain Water Attenuation System

The rainwater attenuation system located in the basement comprises storage tank, discharge pumps and fill prevention valves.

The system is available operation continuously with the discharge pumps operating run and standby, discharge of the tank is full and stopping when the tank is empty. On extra high level in the tank the tank fill valves will be closed, and the rainwater directed to the external drainage system.

3.33.1 Controls Hardware

The MEP specialist shall provide a storage tank in the basement plant room space and a set of run and standby pumps.

The BMS specialist shall provide magnetic type level switches for mounting through the tank wall that start and stop the pump set on high and low level as appropriate. The low level switch shall be wired in series with an additional extra low level switch both of which require to be healthy before the pump set can run. A further high level switch shall open/close the fill and bypass valves.

The BMS specialist shall provide the fill and bypass valves and actuators complete with end switches, which shall be hardwired to fail in the same position with the fill valve closed and the bypass valve open.

The discharge pumps shall operate through hardwired interlocks generally with one pump running. If however the extra high level alarm is active then both pumps shall run until the low-level switch is made.

The system will operate through hardwired interlocks and shall be monitored the status via the BMS.

The BMS specialist shall provide a form 2B type 2 mechanical services power boards and form 1 control panel for this system. The BMS specialist shall provide all controls interlocking cabling between the tank level switches the valves and the pump set. The pump set shall be disabled through hardwired interlocks on extra low water level in the storage tanks.

The systems shall be monitored by the BMS supplied DDC web enabled controller that communicates to the sitewide BMS via the converged network utilising BACnet/IP. The controller is held within a non-door interlocked section of the control panels and is provided with a backlit colour display mounted on the fascia of the panel.

3.33.2 System Operation

The duty pump shall be enabled, assuming all interlocks are healthy, when the tank is in the full position, and it shall continue to run until the tank is in the empty position. It should be noted that additional water can be added to the full and additional water drawn from the empty these are nominal water levels.

If the duty pump fails to run when required then the standby pump shall be operated.

If neither pump has operated for (168) then the BMS shall enable the duty pump for (2) seconds and the standby pump for (2) seconds, assuming all interlocks are healthy.

Both pumps shall be disabled if the low and extra low level switches are both in the alarm state.

Both pumps shall be enabled if the extra high level switch is in the alarm state are both shall run until the low-level switch is active.

If the extra high level switch is active then the fill valve shall be closed and the bypass valve opened. This command shall be through hardwired interlocking with interposing relays driving both valves at the same time.

System Alarms

The BMS shall monitor the system for status and raise alarms on system mismatch with a suitable grace time. The critical alarms, which shall be indicated on the rain attenuation graphic and in the alarm list, illuminate the pump control panel fault lamp and be issued as an email shall be:

- High alarm
- Low alarm
- Loss of power at the pump set control panel

- loss of power at the pumps
- Fill and bypass valve mismatch position.

The maintenance alarms, which shall be indicated on the pump graphic and when in the alarm list shall be:

- Pump fault.

3.34 Water Meters

The MEP specialist shall provide water meters as identified in the public health schedules and schematics. These shall be complete with M-bus collectors that shall be provided by the BMS specialist. The water meters shall be connected via a M-bus and read on a regular basis to form part of the energy management and tenant billing system.

3.35 Electric Meters

The electric meters shall be class 2 MID approved and shall be supplied and installed by the BMS specialist where required for MCC panels and the like with the electrical contractor providing meters in switchboards and distribution boards.
The meters shall all have Modbus connectivity for connection to the BMS/EMS.

The meters shall be read at regular intervals and not less than half hourly all data recorded and stored for 13 months. Values shall be used as part of the energy management and tenant billing system.

3.36 Switchboard Monitoring

The electrical switchboards shall be provided with MID approved electrical meters that shall be networked internally by the switchboard specialist to an ELV section of the switchboard.

The surge arrestor, tripping battery and bus coupler status shall be wired internally by the switchboard specialist to an ELV section of the switchboard.

The BMS specialist shall connect the Modbus electrical meters to the sitewide EMS forming part of the energy management and tenant billing system.

The surge arrestors and tripping batteries shall be monitored by the BMS for status and fault. These shall be displayed on an electroplating dynamic graphic. An alarm shall be raised in any fault condition.

3.37 ATS Monitoring

The ATS units shall be monitored by a packaged system provided by specialist supplier. This monitoring shall include all necessary configuration for the generator start signal is and life safety indication in the fire command centre.
Separately the BMS shall monitor the status of each ATS via a Modbus connection and display the information on the BMS electrical monitoring graphic.

3.38 Energy Metering

The BMS specialist shall provide and set to work the energy monitoring system. This shall be integrated with the site wide automatic control system and include all necessary interface gateways networks, firmware, software and storage systems.
The site wide automatic control system shall include an energy monitoring feature and reporting generally in line with TM 39.

The BMS specialist shall include costs for the supply implementation and management of a specialist off site hosted energy management system and should include all setup costs and first-year running costs from a specialist supplier such as TEAM Energy or Optimised Energy.

All electrical meters within the main distribution switch board and the on floor distribution boards shall be provided with Modbus output and networked together to the energy management system.

The mechanical services power boards shall have electrical meters for large users groups such as the water source heat pumps the heating and cooling circulation pumps, the ventilation plant and the domestic water systems. These meters shall be provided with Modbus output and networked together to the energy management system.

The instantaneous and historical power for each meter shall be displayed on the site wide BMS display screen when requested by the user.

The domestic water distribution system shall be provided with WRAS approved water meters that shall have M-bus integrators connected via the and M-bus network to the EMS. The accumulative volume shall be displayed on the sitewide BMS display screen when requested by the user. The display shall also include the flow rate in the previous hour as an instantaneous value.

The meters shall be read at half hour intervals with sufficient storage capacity provided within the energy monitoring system for up to 13 months data to be retained and reviewed for all connected meters.
MID approved heat meters shall be provided for the heating cooling systems with data provided as appropriate.

The monitoring system shall also incorporate all gas and water meters.

To provide energy use generally in line with TM 39, this requires that at least 90% of the primary energy input to the heating, cooling, ventilation, small power, lighting can be accounted for in each discipline.

Lighting

The energy associated with lighting is directly measured at the distribution board lighting meter.

Small Power

The energy associated with small power is directly measured at the distribution board small power meter.

Air Handling Plant Fan Power

Each office AHU power panel shall be provided with a MID approved electrical meter that shall measure the power consumed by the supply and extract fans. This data shall form part of the energy monitoring system and part of the tenant billing system.

The EC motors shall additionally have Modbus output that will display the energy be consumed by the motors. This value can be used for specific monitoring of individual drives although it is not MID approved and therefore cannot be part of the tenant billing system.

Each retail AHU at level 1 shall be provided with MID approved electrical meters that shall measure the combined power of the supply and extract.

The shower room ventilation plants shall each have separate power meters that shall measure the AHU supply and extract fan power.

Air Handling Plant Heating / Cooling Load

Each AHU shall be provided with MID approved heating and cooling energy meter. This meter provided by the BMS specialist and communicating BACnet/MSTP shall be utilised as part of the energy monitoring system and is part of the tenant billing system.

Ventilation Fans

The basement smoke ventilation fans are provided with inverters that have Kilowatt-hour meters as part of the integral software. These values shall be read at half hour intervals by the BMS stored in the database.

The staircase Firefighting lobby smoke control fans are fed from specialist provided power boards. These boards powered via the ATS that in turn is fed from the LV distribution board that should have MID approved electrical meter. The power consumed by the systems shall be monitored from this LV distribution board meter.

Fan Coil Units

The heating and chilled distribution system to each tenant on each floor is provided with MID approved heat meter on the landlords side of the plate heat exchanger. The energy values and temperature and flow rates should be recorded at half hourly intervals as part of the energy monitoring system. The energy values will separately be used as part of the tenant billing system.

Chilled Water System

The chilled water pumps and pressurisation unit are powered from the BMS provided power board complete with a dedicated power meters. The half hourly readings from this meter shall be designated to the office cooling system.

The chillers and air source heat pump are powered direct from the LV board and the half hourly reading from this meter to be designated to the office cooling system.

MID approved heat meters shall be provided for the primary circulation system and each secondary distribution system. The energy values and temperature and flow rates should be recorded at half hourly intervals as part of the energy monitoring system. The energy values will separately be used as part of the tenant billing system.

Heating System

The heating water pumps, and pressurisation unit are powered from the BMS provided power board complete with a dedicated power meters.

The boilers and associated boiler house ventilation fans are powered from a common power board. The accumulated electrical energy shall be assigned to the heating system.

MID approved heat meters shall be provided for the primary circulation system and each secondary distribution system. The energy values and temperature and flow rates should be recorded at half hourly intervals as part of the energy monitoring system. The energy values will separately be used as part of the tenant billing system.

An MID approved heat meter shall be provided for the heating side of the air source heat pump. The energy values and temperature and flow rates should be recorded at half hourly intervals as part of the energy monitoring system. The energy values will separately be used as part of the tenant billing system.

Domestic Water Systems

The domestic water systems (booster sets, and water treatment) are fed from a BMS provided power board complete with an electrical meter dedicated to these services. The half hourly meter reading shall be assigned to domestic water systems.

Domestic Hot Water Services

The domestic hot water service circulation pumps including the LTHW HWS for the lower upper floors are powered from a common power board. The associated pump is provided with a common MID approved electrical meter the measured energy of which shall be allocated to the domestic hot water system.

The water source heat pump is powered from the BMS provided power board and is provided with a dedicated MID approved electrical meter. The measured energy of which shall be allocated to the domestic water system.

The ASHP and upper level HWS backup pump set is provided with a MID approved meter for the circulation pumps. The BMS shall allocate energy to the HWS only with HWS is required, to the air source heat pump heating system when heating only is required if both services are required simultaneously energy shall be proportioned to the heating system.

3.38.1 Energy Displays

The BMS specialist shall develop energy display dashboards and general energy data dynamic graphics utilising Tridium N4 energy manager.

In the first instance the energy used by the system shall be displayed on the particular dynamic graphic. As example electrical energy and heat/cooling energy absorbed by an air handling plant to be displayed on the air handling plant graphic. The graphic will include instantaneous electrical power, instantaneous heat energy, current flow rate and current In and out water temperatures.

An overview energy page of all AHUs shall be constructed showing on the common page the accumulative electrical power, instantaneous electrical power, accumulative heat energy, instantaneous heat energy, current flow rate and current In and out water temperatures. This will allow the user to compare ventilation plants operating performance.

The energy absorbed at each tenant interface: heat, cold, electrical and where appropriate water shall be displayed on a common graphic showing all office tenants, in a separate graphic show retail tenants.
The individual graphics of the tenant plate heat exchanger set shall show primary side cooling and heating energy along with flow rates and temperatures. The graphics will also show secondary side power being absorbed by the pumps.

The sitewide heating and cooling schematics shall show energy meters with instantaneous and accumulative energy, flow rate and temperatures. These may be on a common energy graphic.

Graphics of major plant the chillers and the water source heat pumps shall show electrical meters and the heat meters displaying all appropriate information.

The electrical distribution system shall have a graphic draw in a similar manner to the electrical schematic that shall display the power being absorbed at each outgoing way.

The energy dashboards shall be dynamic graphics showing current and historical data allowing the user to mix and match meters and data on common reports.

The energy metering system shall include virtual metering and calculation of plant performance. As an example the performance of the cooling system shall be established by measurement of power consumed by the chillers and the proportion of the power absorbed by the air source heat pump when it is in a cooling mode added with the chilled water pump circulation energy to determine total electrical energy being absorbed by the cooling system. This should be compared with the cooling energy produced by the heat meters which shall produce a pseudo coefficient of performance of the cooling system. This performance should be monitored regular basis at half hourly intervals and where changes of more than 5% noted an alarm raised.

In a similar manner the gas used by the boilers in conjunction with electrical pumping energy used by the heat pumps shall be compared to the LTHW heat produced providing a pseudo coefficient of performance of the heating system. This performance should be monitored regular basis at half hourly intervals and where changes of more than 5% noted an alarm raised.

The electrical energy absorbed by the cooling system (excluding pumping energy to the WSHP) shall be measured on the half hourly basis and shall be proportioned to the cooling energy being absorbed by each tenant at the same time. The result shows the amount of central plant energy being used by each retail and office tenant in relation to the energy being absorbed by the office tenant.

In a similar manner the electrical energy absorbed by the heating pumps and the gas energy absorbed by the boilers shall be measured on a half hour basis and proportioned to the heating energy being absorbed by each tenant at the same time. The result shows the amount of central plant energy being used by each retail and office tenant in relation to the energy being absorbed by the office tenant.

3.39 Tenant Billing

The BMS specialist shall provide the tenant billing package for the complete works. In the first instance the BMS specialist shall attain prices from hosted off-site energy billing specialists such as- TEAM energy or Optimised Energy who shall provide the complete tenant billing and software package and include this in the tender sum.

These specialists shall be managed by the BMS specialist, the BMS specialist shall include the full system configuration and the first year licence and running costs for the billing and the energy management system. The BMS specialist shall include all costs associated with configuration of the interface between the site remote host and providing management support to the remote host with regard to data transfer and understanding of the location and type of beaters and the configuration of the direct and indirect billing systems. As an alternative the BMS specialist shall provide a similar package of works for the tenant billing and the EMS hosted on the BMS server and included as an alternative project cost.

The BMS specialist shall provide a tenant billing package for the project. The BMS specialist shall provide and configure a standard tenant billing package that may require modification to suit this particular site. The tenant billing package that shall be for the individual office demise and shall be generated automatically when requested by the user.

The BMS specialist shall host the tenant billing system on a secure server stored within the envelope of the building. The system shall be configured such that individual tenants are provided with password protected access rights to their billing section which should include bills and energy data that makes up this bill.

The bill shall include for each tenant such information as:

- Meter references
- The tenant's name
- The tenant's account number
- The tenant's address
- The bill shall include for each type of meter such information as:
- The previous energy meter reading and date -separate data shall be provided for low tariff/high tariff times
- The current energy meter reading and date - separate data shall be provided for low tariff/high tariff times
- The energy use in the billing period - separate data shall be provided for low tariff/high tariff times
- The client charge for energy unit rate
- The total charge for the energy
- Client add-on service charges
- VAT
- The energy used in the previous year.

The billing system shall include the ability to include central support services as well as the directly measured meters.

The tenant billing shall provide the following web functionality as a minimum:

- Comprehensive invoicing for all metered utilities.
- Preconfigured report and invoice templates.
- Automatic and on demand Bill Generator.
- Multiple utility tariffs.
- Customised billing period and rate structure.

- Customised bill generation to client layout/logo requirements.
- Multi-user access, password protected via web browser.
- Error and missing dada detection diagnostics and reporting.
- Tenant personnel account management.
- Invoice summary reports.
- Landlord common area cost allocation to tenant bill.

Directly Measured Electrical Use

The directly measured meters include the tenant demise electrical meters. -Small power, lighting, mechanical services.

Directly Measured Chilled & LTHW Water Use

The directly measured chilled and heating water heat meters shall form part of the tenant direct billing system.

Indirect Cooling Charges

The software package shall for the billing period assign a proportion of the office cooling system energy within the same period. The total cooling water energy (heat meter) consumed by each tenant shall be aggregated and each tenants proportion calculated. The office cooling system energy (chilled water pumps and chillers) shall be proportioned to the same value to each tenant such that cooling water charges include the measured on floor chilled water energy and the proportion of energy consumed by the pumps and the chillers.

Indirect Heating Charges

The software package shall for the billing period assign a proportion of the office heating system energy within the same period. The total heating water energy (heat meter) consumed by each tenant shall be aggregated and each tenants proportion calculated. The office heating system energy (LTHW water pumps and gas absorbed by the boilers including HWS) shall be proportioned to the same value to each tenant such that the heating water charges include the measured on floor heating water energy and the proportion of energy consumed by the pumps and the boilers, minus the heat energy absorbed by the HWS system.

Office Ventilation Charges

Ventilation to the office tenant is provided from the on floor or the rooftop air handling plants. These air handling plants are provided with electrical meters for the fan energy and heat meters for the heating and cooling energy. Each tenant is provided with a VAV terminal units device with the air flow monitored by the sitewide BMS.

In the first instance the energy program shall measure the AHU electrical consumption in half hour cycle and the heating and cooling water energy in half hour cycle and apportion this to the appropriate tenants who are operating in the occupancy mode. It may be assumed that the proportion of electrical energy required for the tenant pumping system is previously recorded within the tenant heating cooling bills generated at the plate heat exchangers.

Toilet Ventilation

Ventilation to the toilets is provided from the rooftop air handling plants. These air handling plants are provided with electrical meters for the fan energy and heat meters for the heating and cooling energy.

The energy program shall measure the AHU electrical consumption in half hour cycle and the heating and cooling water energy in half hour cycle and apportion this to the appropriate tenants who are operating in the occupancy mode. It may be assumed that the proportion of electrical energy required for the tenant pumping system is previously recorded within the tenant heating cooling bills generated at the plate heat exchangers.

Domestic Hot Water

The domestic hot water to the upper floor tenants is normally provided by the water source heat pump and primary secondary LTHW pumping circuits. The electrical energy absorbed by the equipment shall be apportioned to each tenant on a pro rata basis determined from total hours of occupancy for each tenant per month.

The domestic hot water to the lower floors is generated from the gas fired boilers and circulated by LTHW pump set. The domestic energy bill shall be determined from the LTHW/HWS heat meter, and the power consumed by the pumping circuits. The electrical energy absorbed by the equipment shall be apportioned to each tenant on a pro rata basis determined from total hours of occupancy for each tenant per month.

3.40 Energy management

The BMS specialist shall provide in conjunction with a managed off-site solution the energy management system for the project.

The primary cost to be included in the tender shall be the energy management system provided by the third party specialist hosted off-site specialist such as Team Energy or Optimised energy with alternative cost provided for a on site BMS solution using a Tridium solution.

The BMS shall gather data from all meters provided in the project, the data gathered forming part of the monitoring and targeting system along with CO2 management reporting..

The raw and process data gathered shall be capable of being transmitted from the BMS to a third party via an agreed high level protocol such as a web service, BACnet/Ip, OPC, OBIX ethernet/IP. For tender purposes, this shall be assumed to be a native BACnet solution.

The energy monitoring system shall be used to:

- Improve the overall building performance and reduce consumption and emissions.
- Provide targeting and benchmark data for continual improvement.
- Automatically highlight areas of poor performance in a simple graphical manner.
- Provide performance data to inform design of future phases.
- Provide energy dashboards of key consumption data for FM and occupant display systems.
- Provide energy dashboards for FM and occupants access from smart phones or tablets.
- Provide data for external educational organisations.
- Provide data for CSR and regulatory reporting.
- Increase awareness and encourage behavioural change.
- Provided specialist consultants with access so to advise on areas for improvement.
- Monitor building in use performance verses design criteria.
- Predict future consumption and emissions based upon scenario analysis.
- Inform the ongoing energy action planning and tracking.
- Provide power quality data.
- Provide system performance verification reports during the defects period.

Metering and monitoring of the utilities consumption in various areas of the building shall provide information to facilitate monitoring and targeting. The metering and monitoring system shall also provide a key tool to set up an energy management system according to ISO 50001/EN 16001, enabling continuous improvement of energy performance in operations.

The Contractor shall configure the energy metering and sub metering using best practice (CIBSE TM31, 39 and 46) to ensure compliance with current legislation (Part L2A 2010 of The Building Regulations and DEC) and to help the user manage the energy consumption in the building and achieve ISO 50001 Energy Management System and BREEAM environmental assessment target.

The EMIS supplier shall be responsible for securely hosting the data and associated applications in the cloud at a resilient collocation data centre and shall include all costs to host such data during the defects liability period. Prior to EMIS award the EMIS Contractor shall agree with client the ongoing fee associated with hosting such data and any agreements in regard to the return of such hosted data should the client not wish to continue to purchase the service from the Contractor in the future.

The EMIS shall provide the following web functionality as a minimum:-

- Track and report on energy use, energy costs and carbon emissions.
- Analyse energy use day on day, month on month, year on year.
- Create virtual meters utilising electrical, heat and calls meters and data gathered from inverters and fan powers
- Allow informed, proactive decisions to be taken.
- Provide alarm notification of unusual energy consumption against baseline.
- Provide Benchmarking energy use against government or user defined standards such as CIBSE TM 46
- Weather normalised energy use to compare actual use across time.
- Create energy reports to compare daily, weekly, monthly and annual energy use.
- Forecast consumption and costs.
- Graphical and tabular presentation of data.
- Scenario analysis – What ifs.
- Standard pre-configured Interactive Reports package.

The system shall generate typical energy displays as follows:-

Sustainably

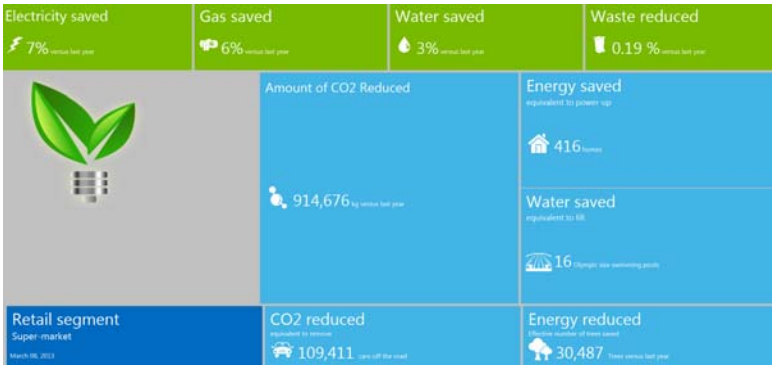

Consumption

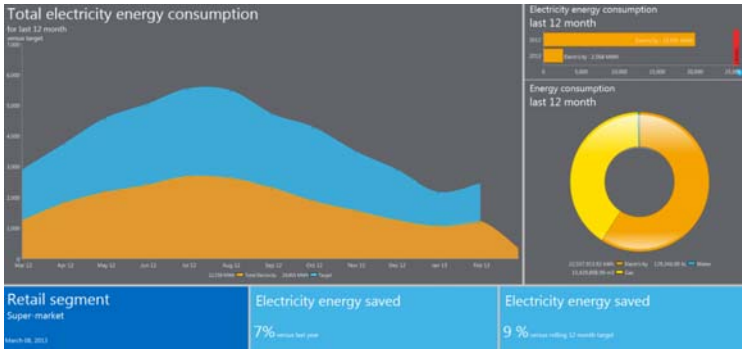

Summary

Office

Retail Unit

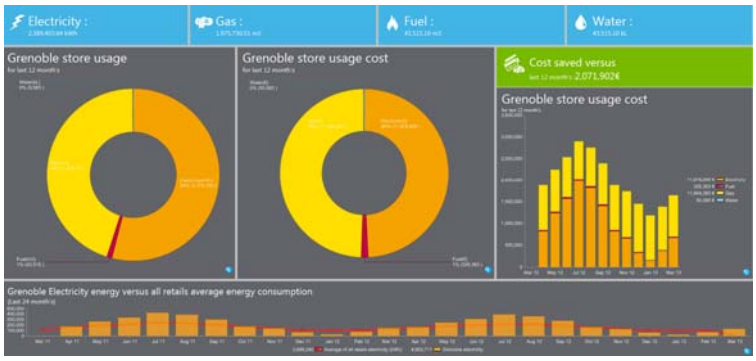

Electricity

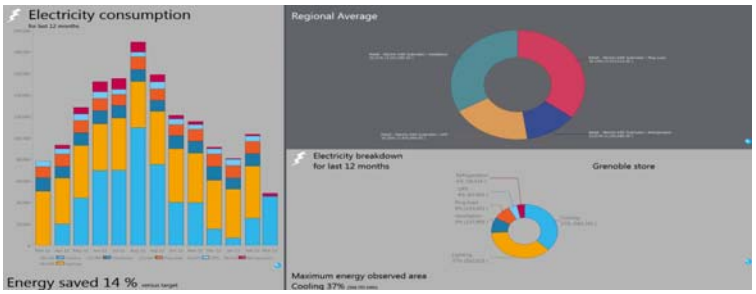

Benchmarking

The BMS/EMIS supplier shall operate a 24/7/365 energy and support bureau and shall have qualified energy engineers and professionals to assist the client in system operation and optimization both remotely and on site. The costs associated with remote support shall be included within the defects liability period. Prior to EMIS award the EMIS Contractor shall agree with the client the ongoing fee associated with this remote support and any also costs associated with additional site based professional support.

3.41 Control Panels BMS Specialist

3.41.1 Mechanical Services Power Requirements

The specialist contractor shall design supply and install all Motor Control Panels (MCC) and control enclosures (CE) for the project. The panels shall incorporate all the necessary equipment and shall be delivered to site complete with internal wiring. All connections shall be arranged within the panel in neat symmetrical and logical manner.

The panels shall be constructed to BS EN 61439 – 3.

Generally the panel shall be form 2B type 2 for standard systems, form 3b type 1 for life safety systems and form 1 for BMS control panels.

The BMS panels can either be an integral part of the MCC or free standing.

All panels shall be provided with a standard manufacturers finish, and no doors shall exceed 750 mm wide.

It will be necessary that the control specialist provides a separate panel that contains the controls transformers as an intermediate panel between the electrical supplier power board and the automatic controls specialist panel. This is required such that the control panel houses ELV services only, other than the lap top socket that shall be mounted on the side wall of the control panel.

Power Distribution Board

Where MCCs require a power distribution board for remote ancillary equipment these shall a pan assembly IP 31 type distribution board within a non-door interlocked section of the MCC. All outgoing ways shall be provided with MCBs lockable in the off position. The panel shall be constructed such that all outgoing ways can be removed and replaced without the need to isolate the mains to the board.

The mechanical services plant and equipment shall be power wired from local mechanical services power boards or motor control centres as appropriate. In general each main plant item such as an air handling plant and the associated extract system shall be powered from the local form 2B type 2 power board. Associated with this power board shall be the form 1 controls enclosure that shall only contain ELV services. Any LV services such as Transformers shall be located in the power section of the MCC/MSPB.

The life safety plant and equipment shall be powered from form 3B type 1 power boards with an associated form 1 control panel.

The control panels shall contain ELV services only.

The panel shall be constructed to industry standards and be complete with Trirated cabling throughout and shall have 3 phase healthy lamps and MID approved electrical meter display on the fascia.

3.41.2 Control Equipment

The control equipment for the building services plant and equipment shall be direct digital control with distributed intelligence and to communicate via BACnet.

The control equipment shall be connected to the sitewide BMS via the converged network.

The controller modules shall be located within the control panels and shall be provided with integral hand off auto switch modules. These manual switches shall be used in preference to any rotary switches mounted on the fascia of the control panels.

The control panel fascia should be complete with a backlit display panel of at least 250 mm diagonal dimension. This display panel shall be a web browser to graphics embedded in the local controller. This local controller shall provide FM team with manual control facilities for connected plant. It may be assumed that the manual operation of the plant shall be via software within the DDC controller, it is not necessary to provide other hardwired interlocking relays systems unless advised otherwise.

3.41.3 Power Wiring

All plant and equipment power wiring emanating from the mechanical services power boards shall be suitably rated for the services served. The nonlife safety equipment shall have steel wired armoured cabling or single core cabling in conduit/trunking.

All cabling shall comply fully with the requirements of the electrical specification.

The life safety plant and equipment shall have BS 8519 category 3 for both control and power wiring.

All cables shall be manufactured by a BASEC certified company.

The use of PVC cabling is not permitted, all multi-core cables shall be SWA, and cables shall have a LSOH outer sheath. Tested in accordance with BS EN 60754 and BS EN 60332.

All LV and ELV power cabling shall be installed in conduit, trunking or on tray as appropriate. All power cables shall be single core LSF in conduit with XLPE/LSF/SWA being used on tray or any exposed surfaces. Low voltage power cables shall have a minimum csa of $4mm^2$.

All cabling shall comply fully with the requirements of the electrical specification.

Where cables are mounted externally these shall be protected from UV degradation.

3.41.4 Controls Cabling

The specialist contractor shall provide all control wiring and carrier systems for equipment connected to the MCCs and the CEs.

The ELV signalling controls cabling shall be to a standard required by the controls specialist generally twin twisted pair. These cables shall be run in conduit or trunking, shall be manufactured by a BASEC company and finished with an LSOH outer sheath.

All cabling shall comply fully with the requirements of the electrical specification.

The use of PVC cabling is not permitted; all cables shall have a LSOH outer sheath. Tested in accordance with BS EN 60754 and BS EN 60332.

BMS extra low voltage cables will have a minimum cross sectional area of 0.75 mm^2 (7/0.37 mm dia) with due regard to cable resistance for sensors and shall be in conduit or trunking all final connections to equipment shall be via flexible steel conduit. Loose laid controls cabling is not permitted.

All controls cabling shall be screened and shall be located at least 200mm from any power cabling and not run parallel to the ELV/LV system cables.

All controls cabling will be screened, installed within conduit or trunking have a LSOH outer sheath. The final connection to devices may be through flexible galvanised conduit.

3.41.5 Carrier Systems

The cable carrier systems shall be provided by the automatic controls specialists throughout the project. The standard of workmanship shall be as described in the electrical specification.

Power cables shall be laid on medium duty cable tray or pulled through conduit and trunking. The ELV signalling cable shall be installed in conduit and trunking whilst the network cable may be mounted on basket.

3.42 Motor Drives

3.42.1 Speed Control Device

The mechanical motor driven equipment: pumps and fans generally greater than 1.1 kW shall be provided with integral motor protection and speed control.

The small pumps will have integral electronic speed controllers, the medium-size pumps will have integral inverters the large-size pumps free standing inverters.

The free standing small fans shall have integral electronic speed controllers, the free standing larger fans shall have inverter drives.

The air handling plants shall most likely have EC motors with integral speed control, although an allowance should be made for these fans to have remote inverters.

3.42.2 AHU Motor - BMS Interface

The AHU specialist when providing EC motors shall interconnect all internal motor power requirements and terminate in a IP65 rated common lockable 4 pole isolator mounted on the outside of the fan enclosure. The AHU specialist shall interconnect the Modbus monitoring circuitry for each motor drive and terminate in an IP65 rated junction box in the outside of the fan enclosure. The AHU specialist shall provide interconnecting cabling between all motors for the common external 0-10 V speed control signal and the enable signal and terminate this in a suitable junction box on the outside of the fan enclosure. The speed control will be generated by the sitewide BMS controllers.

The monitoring of the fan status (running/fault) shall be via a common output interconnecting between the motors and terminating at a volt free contact in a junction box on the fan enclosure.

The Modbus shall be used for general motor monitoring.

As it is not possible to provide manual speed control by using local keypads (as is possible with an inverter), the BMS specialist shall provide this function using the AHU BMS controller. To achieve this the BMS keypad shall provide user graphics allowing plants to be set to manual control and user adjustable knobs to set the operating speeds of the drive. Over and above this the BMS modules shall have hand off auto Selector switches that can be used to enable the fan and provide a variable output for the fan speed.

These EC fan motors shall have class 2 electrical meters within the BMS control panel with Modbus output that shall be monitored by the BMS.

Where the AHU is provided with an inverter this shall be mounted in an IP 5 X enclosure on the side or local to the AHU. The inverter shall be complete with BACnet/Modbus for high level integration to the sitewide BMS with hardwired connections for enable/speed control and status monitoring.

3.42.3 Small Fan Systems

These small fans should be provided with integral speed control motor protection devices provided by the fan manufacturer. The fan controller shall have BACnet interface for remote integration to the sitewide BMS that shall have an ELV safety circuit that can be interlocked with hardwired relay logic.

Generally the fan should be enabled and operated by the BACnet interface with the safety circuit via a hardwired installation. Where the fan is required be shut down in fire mode and the hardwired interlocking is of a simple nature (e.g. there are no motorised isolation dampers) then the power section of the control panel shall have a contractor that is opened in a fire mode. Up to 6 fans can be powered from an individual contactor.

3.42.4 Twin Fan Units

Where fan units are provided these shall be complete with integral speed control, motor protection devices, auto change over and duty rotation control. The fan controller should be provided with ELV outputs for remote start stop and Safety interlocking and for monitoring running/fault status.

Fan controllers requiring 0-10V control signals are generally not to be provided. However where necessary and if these are provided the speed control shall include hardwired interlocking relays that can be open circuit for shutdown and safety interlocks.

3.42.5 Large Fans

The large fans shall be provided with free standing inverters of a standard industry supply of equipment similar to Danfoss FC 102. These inverters shall be connected to the sitewide BMS through hardwired connections control and monitoring and Modbus/BACnet for general monitoring purposes.

3.42.6 Small Pumps

The small pumps shall be provided complete with integral speed control and ELV connections for remote stop start and status monitoring.

Where sensorless type control is provided (limited to small systems of no more than 15 fan coil units, underfloor heating system, trench heating systems and the like) then these parameters shall be set by the pumps specialist supplier. The pump shall be complete with ELV connections for remote stop start and status monitoring and shall have integral motor protection.

3.42.7 Medium-Size Pumps

Where medium-size pumps are provided with integral inverters, these inverters shall not be blind but shall be provided with key pad and display that can be operated without special equipment by the FM team.

These pumps shall have ELV connections for external stop start and speed control. The speed controller shall be complete with Modbus or BACnet communications that shall be connected to the sitewide BMS for general system monitoring.

3.42.8 Large Pumps

The large pumps shall be provided with free standing inverters of a standard industry supply of equipment similar to Danfoss FC 102 or similar.

These inverters shall be connected to the sitewide BMS through hardwired connections control and monitoring and Modbus/BACnet for general monitoring purposes.

3.43 BMS Drawing Register

0010 Legend
0510 Control Panel sheet 1.
0520 Control Panel sheet 2.
0530 Control Panel sheet 3.
0540 Control Panel sheet 4.
0550 Control Panel sheet 5.
0560 Control Panel sheet 6.
0570 Control Panel sheet 7.
0580 Control Panel sheet 8.
0590 Control Panel sheet 9.
0710 Control Panel layout basement 2.
0730 Control Panel layout ground floor.
0740 Control panel layout level 01.
0750 Control Panel layout level 02.
0760 Control Panel layout level 03.
0770 Control Panel layout level 04.
0780 Control Panel layout level 05.
0790 Control panel layout level 06.
0800 control panel layout level 07.
0810 Control panel layout level 08
0820 Control Panel layout Roof.
1010 Ventilation sheet 1.
1020 Ventilation sheet 2.
1030 Ventilation sheet 3.
1040 Ventilation sheet 4.
1050 Ventilation sheet 5.
1060 Ventilation sheet 6.
1070 Ventilation sheet 7.
1080 Ventilation sheet 8.
1090 Ventilation sheet 9.
1100 Ventilation sheet 10.
1110 Ventilation sheet 11.
1120 Ventilation sheet 12
2010 Ventilation sheet 13
2015 Ventilation sheet 14
2020 Ventilation sheet 15.
5010 Heating sheet 1.
5020 Heating sheet 2.
5025 Heating sheet 3.
5030 Heating sheet 4
5040 Heating sheet 5.

5100	Heating sheet 6.
5210	Heating sheet 7.
6010	Cooling sheet 1.
6020	Cooling sheet 2.
6030	Cooling sheet 3.
6040	Cooling sheet 4.
7010	control and monitoring sheet 1.
7020	Control and monitoring sheet 2.
7110	Control and monitoring sheet 3.
7120	Control and monitoring sheet 4.
7510	PHE control and monitoring sheet 1.
7515	PHE control and monitoring sheet 2
7520	PHE control and monitoring sheet 3.
7530	PHP control and monitoring sheet 4.
8010	Electrical monitoring sheet 1.
8020	Electrical monitoring sheet 2

4 Standards of Materials and Workmanship

4.1 BMS Field Instruments and Actuators

The BMS specialist shall determine the field instruments and actuators based on the information provided in the project specification.

4.2 Operating Software

The automatic controls and BMS specialists shall develop the automatic controls functional design specification and expand this to a detailed description of operation.

The functional design specification should set out in straightforward language the plant operation and user management interfaces.

The BMS specialist shall discuss and agree with both the client, the facilities management team and the clients consultants the final agreed functional design specification. This work should be carried out in a series of workshops at which all parties shall be invited to make suggestions and receive detailed advice on the agreed solution for the operation of each plant item.

The BMS specialist shall then develop this functional design specification to include necessary hardware and software points, whether these be existing or new along with any necessary wiring diagrams.

The BMS specialist shall finally design and produce the plant functional operating control strategy and implement this across the site.

4.3 Standards Codes and Regulations

The Automatic Controls will be designed, installed, tested and commissioned in accordance with the following:

- Statutory Acts
- Local Standards and Standard Codes of Practice
- Local Authority Building Regulations
- Health & Safety at Work Act
- The requirements of the relevant Local Authority
- The requirements of the relevant Water Authority
- The requirements of the relevant Fire Authority
- The fire officers committees/the loss prevention councils rules and recommendations
- The Factories Act
- Current Institute of Plumbing Standards
- The current Electrical Regulations with amendments
- The Environmental Health and Safety Office
- Manufacturers Recommendations for Installation Testing Commissioning and
- The Landlord’s Regulations and Approvals
- Reference shall be made to BS 7002, BS EN 55022, BS EN 61000, BS EN 55014, BS EN 60439, CIBSE Guides and Commissioning Code C, BS EN ISO 9000 and the Controls Group Publications.

4.4 Quality Control

The contract will be carried out under following the principles of the BMS specialist's Quality Assurance documentation. All equipment supplied will receive commercial tests to comply with IET Regulations.

All equipment will be CE marked.

No materials shall be installed which may pose a hazard to health of the construction, maintenance or eventual occupants of the building.

No materials shall be installed which are potentially damaging to the Environment.

All electrical equipment shall be designed and fitted with interference suppression devices to comply with BS EN 6100-4-3 and components and filter units shall comply with BSEN 55011-1A.

4.5 Responsibilities

4.5.1 Design

The Automatic Controls specialist will examine all drawings and documentation and will produce for approval the basis of design. The design will be carried out by competent engineers and will be suitable for the intended purpose. The design will incorporate any necessary statutory requirements with respect to Health and Safety.

4.5.2 Supply

The Automatic Controls specialist will supply all materials and equipment necessary to be installed for the complete control and monitoring system. All materials and equipment will be suitable for purpose and location. All materials and equipment either manufactured by the automatic controls specialist or bought from an outside source will conform to all relevant Local Standards. The equipment supplied will all be of a standard type and readily available for replacement in the event of damage or malfunction.

4.5.3 Submittals

The Automatic Controls specialist will submit for approval full details and samples of all sensing and controlling equipment, general arrangement drawings showing the position of all equipment and wiring routes. Samples of any component that is to be mounted within the occupied space, points charts, block wiring diagrams and schedules appertaining to the interfaces between the Automatic Controls specialist works and other parties. All block wiring diagrams will be complete with the BMS specialist terminal numbers.

Where the controls interfaces with other equipment the BMS specialist will co-ordinate the interface wiring diagrams and provide the necessary interface hardware.

4.5.4 Naming Convention

The BMS specialist shall develop the naming convention utilising strategies within N4 and using Haystack stack or Brick schema as appropriate.

4.5.5 Equipment Labelling

The smart building environment requires that all major plant and equipment including such items as valves, actuators, sensors are provided with unique identifiers. It is necessary that these identifiers are applied directly to the field equipment both as a text and as a QR code.

The BMS specialist shall include costs for providing and installing the QR code and the text identifier for all plant and equipment located outside of the control panel. The text and QR code should be printed on paper and encapsulated within heat shrunk plastic envelopes and tie wrapped to the equipment. When this equipment is located in public areas the identification shall be mounted on the inside of the device cover may be glued rather than encapsulated.

4.6 Operating and Maintenance Manual

The Automatic Controls specialist shall provide the O & M manuals associated with his works to the standard described in the contract.

Unless otherwise agreed, issue, four hard copies of all manuals and operating and maintenance instructions in stiff-backed four ring binders, together with a copy in an electronic format.

Before the final issue, send two proofed copies of the manuals for approval of format and general content. Allow 14 days for approving. These shall be issued at least one month before practical completion.

Include the following information in the operating manuals:

4.6.1 Index

- General description of the installation, equipment used and method of operation of the installation
- Description of operations and hardcopy of software
- Description of the management use of the head end supervisor. This would include but is not limited to: booting of the system, signing on, setting and changing passwords and access levels, graphical navigation, setting all set points, acknowledging and resetting alarms. Setting of alarm parameter and error messages, archiving data, back up and restoration, creation of dynamic graphics, assigning point names to field and graphic devices. The provision of a catalogue is not acceptable. The descriptions shall be written specifically for the project
- Handbooks, maintenance instructions, drawings and spare parts list for all components, plant and equipment used in the Contract works
- Line diagrams indicating the main features of the plant, drawing attention to the method of setting the control dampers, switchgear, safety precautions etc
- Schedule of routine maintenance, complete with list of normal consumables
- Schedule of periodic and preventative maintenance for specialised equipment
- Schedules of methods of adjustments, typical fault-finding routines
- Schedule of operation and maintenance risk assessment sheets in accordance with the Construction (Design and Management) Regulations 2007
- Wiring diagrams of plant etc., including points, charts and logic diagrams
- Service manual for all specialised plant, giving all details as listed above
- Schedule for obtaining and ordering replacement parts
- Schedules of equipment valves and motors related to the "As Installed" drawings and giving names, address and telephone number of manufacturer, serial number of plant, kilowatt-power electrical supply, performance duties and location within the building
- Description of emergency action that should be taken in case of a breakdown of equipment. Telephone numbers of essential contacts shall be included
- Outline design data of plant
- Test and performance data, including all set points

- Test Certificates
- Schedule of "As Installed" Drawings. These shall indicate the location and reference of every field mounted instrument and actuator
- Legend for colour - coded services
- Copies of all manufacture guarantees.

In addition, and separate from the Operating Manuals, supply four hard sets of manufacturer's catalogues relating to specialised plant and equipment. These are also to be in an electronic format.

The requirements and obligations of manufacturers to provide literature as part of the installation record shall form part of plant and equipment orders and such orders shall be considered unfulfilled until literature requirements have been met.

4.7 Electrical Supply

The equipment supplied will be suitable for operation on 400/230V, 50Hz supplies and the supply voltage and frequency tolerances permitted by the Electricity Supply Regulations and the Electricity Board Regulations.

The BMS specialist will provide all necessary screening and earthing to both the wiring and the control/outstation panels to prevent corruption of the controls installation. Due consideration will be taken of the effect of hand held radios and pagers within the vicinity of the system.

The complete controls installation will be protected from the effects of electronic interference and in turn will limit its interference to other sources all as outlined in the latest EMC Regulations. Particular care is to be paid to inverters which are to be fitted with internal RFI filters.

4.8 Panels

The power and control panels shall be provided by the specialist supplier and constructed generally in accordance with BS EN 61439 Part 1 2011, Part 2 2011 and Part 6 2012.

The configuration of the panels shall suit the project and would include for the power section: form 3b type 2 for life safety and business critical equipment and form 2B type 2 for all other power requirements all cubicles shall have door interlocked isolators.

Where required for power monitoring the power boards shall be subdivided with separate door interlocked cubicles to serve particular M and E plant items that require to be separately monitored to meet the requirements of TM 39.

All panels shall be IP54 rated and where mounted externally shall be complete with anti-condensation heaters in both the power control section. The external panels shall be provided with a weatherproof enclosure complete with viewing panel.

All power boards have a short circuit rating of 20KA and where panels feed externally mounted plant or equipment these shall have class 2 surge protection device.

All control enclosures serving externally mounted plant and equipment shall have class 3 surge protection devices.

The control sections whether or not these are physically part of a power/control panel, commonly called an MCC, shall as a minimum be form 1 non-door interlocked. The control enclosure shall contain ELV services only all controls transformers and LV protection devices shall be within a separate door interlocked panel either being the power section of the common panel, or a separate form 1 panel mounted alongside the control enclosure. Where a power socket is required within the controls enclosure this should be mounted on the sidewall and under no circumstances shall LV cabling be run in the same trunking system as any ELV services.

The panel specialist shall coordinate with MEP equipment suppliers all necessary power feeds, the power feed described in the specification should be considered as a minimum requirement.

All switches, displays, handles and the like shall be positioned between 450mm and 1900 above the general level of the plant room floor. Panels shall not be more than 2200 high and doors shall be no wider than 750 mm.

4.8.1 Control Enclosures and Outstations

The Automatic Controls specialist shall design supply and install all control enclosures (CE) for the project. The panels shall incorporate all the necessary equipment and shall be delivered to site complete with internal wiring. All connections shall be arranged within the panel in neat symmetrical and logical manner.

The controls shall be arranged so that work can be carried out on any circuit in complete safety with all other circuits alive and in service.

The Client Representative will carry out the inspection of the panel at the manufacturer's works and the Contractor shall give the Client Representative seven days' notice of the date of which the tests are to take place.

Control enclosures shall be provided for all plant.

Control Outstation Panel

The BMS specialist shall provide form 1 control enclosures and mounting frames. The CEs shall house all control gear including DDC controllers, the ELV interlocking, network controllers, RCD protected twin socket unit, panel lamp and on the fascia all lamps and display pads.

All control outstation panels should be powered from remote power boards such that the control panel only has ELV services within it. Where panels are associated with power boards and constructed in an MCC style then the controls transformer and all LV services associated with the control system shall be within the power section of the board.

Where remote panels are provided the panel shall be 2 sections, one that shall hold the controls transformer and all LV protection this shall be in a door interlocked panel whilst the controlling outstation and or control devices shall be in a non-door interlocked part of the panel.

The CEs shall be non-door interlocked form 1 with ELV services only, the exception being the RCD protected twin socket.

All cabling within the panel shall be tri-rated and all LV cabling shall be double insulated.

Panels shall be provided for each outstation. The LV power section of the control panels shall be provided with the following: Incoming main isolator non door interlocked

- LV protection fuses/MCBs
- 24V AC/DC power supplies
- Transformers as necessary
- UPS as necessary
- Control circuit healthy lamp
- Identification labels, panel serial numbers.

The controls section of the panel shall be provided with the following

- 13A socket with RCD
- BMS comms socket

- BMS touch screen operator panel
- BMS outstation(s) c/w I/O modules
- RJ 45 sockets
- Control and LV circuit healthy lamp
- Common alarm lamp driven from BMS DO with reset button
- Drawing Holder pocket
- Identification labels, panel serial numbers.

Outstation Panels

Each outstation will contain sufficient resident software and data storage capability to fulfil the operational functions detailed in the specification, schedules and drawings. The outstations will contain all interfacing equipment between plant and equipment.

Outstations will have a standalone capability such that in the event of transmission failure, the outstations will continue to operate with all sequence interlocks and control strategies operating normally excepting those that require global information. Default will then be assumed for these global parameters.

The control panels will be provided to house all the de-coding devices, interface relays where required, transducers and reset devices. The programmable software in the controllers will be capable of being updated from a local IP connection.
Controllers will incorporate a self-test facility and be able to provide the user display with status information concerning their internal operations. This information will include, but not be limited to:

- Data transmission conditions and verification
- Internal status
- Battery condition, where applicable
- Any outstation failure will raise a critical alarm.

The controllers will be capable of accepting digital, analogue, pulse and pulsed inputs and providing digital and analogue outputs.

Where AO are specified in the BMS schedules a pair of BO will not be considered as an acceptable alternative.

Multiplexes or any other device making use of a single analogue output to switch or monitor numerous input/outputs shall not be acceptable.

Capacity

Each outstation will be provided with capacity and memory for future additions of at least 25% of each type of point. This memory will be sufficient to allow all programs associated with all points to be run in the outstation.

Each outstation shall be provided with an additional 25% capacity of each point type all of which shall be wired to terminals.

The outstations will be constructed so that the cabinets and internal terminal strips can be mounted, and electrical terminations made, with all electronics being added at a later date during the testing and commissioning phases of the project.

The outstations will be provided with their own internal battery back-up power supply capable of maintaining the memory for not less than 72 hours.

Installation

The BMS specialist will provide all necessary outstations to fulfil the complete requirements of the BMS.

Outstation interfaces with sensors and operating devices.

Digital inputs - electric power for contacts will be provided by the outstation.

Digital outputs - The contact output signals rated at 2A inductive will be suitable for operating remote devices with 230-Volt 50Hz coils.

Digital inputs and outputs - If the Contractor's system requires any other form of interfacing than those for the systems detailed previously, he will provide all necessary interfacing elements for each remote sensor and device. Where voltage change of state is used, it will be the Automatic Controls specialist responsibility to ensure that the remote sensors and operating devices including those supplied by others are compatible with the system offered.

All analogue temperature sensors will have a resolution not exceeding 0.25°C accuracy better than +0.5°C and stability at least equal to Platinum resistance thermometers of Class 1 standard.

Analogue outputs - Out signals will be either 4.20 mA, 0-1 Volt DC, 0-10 volts DC.

Construction

All panels shall be folded sheet steel construction not less than 2.00 metric gauge or constructed on a modular metric gauge flush sheet steel finishing. Additional supports are to be provided within the panel where required to support heavy items of equipment, instruments, etc. Any fixing screws required for removable panels shall be chrome plated and if not, counter sunk screws shall be provided with plated washers. All panel corners shall be radiused. Panel doors shall not be greater than 750 mm wide and shall be fixed with lift-off hinges to facilitate removal. All components must be readily accessible for maintenance with the doors open and any component must be removable without removing the doors.

The panels shall be dust and damp proof enclosures generally to IEC 529 (BS 60947) IP54 with suitable gaskets provided round the doors and any removable covers. These gaskets are to be expanded PVC fixed by adhesive and, where possible, retained in a metal trim. All access doors shall be fitted with a common key operated lock for the particular project.

All components including those in wire ways such as bus bars bolts shall be accessible and manipulable from the front of the panel. If panels are island mounted access may be from the rear.

All cables, unless agreed with the Client's Representative, shall enter and leave the panel though gland plates at the top.
Lifting eyes shall be provided for convenience in handling large and heavy panels.

Painting

Before despatch from the manufacturer's works, all exposed metal surfaces of the control cabinets shall be finished as described.

For indoor use, the cabinets shall have two coats of rustproof primer, filled as necessary and flattened to a smooth finish, then two undercoats followed by a final finish of two coats of epoxy resin paint, to an approved colour, the final coat drying to form a hard semi-gloss surface.

For outdoor use, there shall be an additional coat of epoxy resin paint drying to a high gloss finish.
Colours of all internal surfaces for both indoor and outdoor use of sheet steel fabrication shall be white semi-gloss.

External colours shall be to the approval of the Client Representative.

Galvanising

Where galvanising is specified as the finish, it shall be carried out as follows:
Galvanising shall be applied to the galvanising thickness and quality of zinc conforming to BS EN ISO 1461. The zinc coating shall be smooth, clean and uniform thickness and free from defects. The preparation of galvanising itself shall not adversely

affect the mechanical properties of the coated material. Sherardising or other special process shall not be used unless approved.

All drilling, punching, cutting and bending of parts shall be completed and all burrs shall be removed before galvanising is carried out.

Care shall be taken not to abrade galvanised or specially treated surfaces. Care shall be taken to remove rust streaks or foreign matter deposited on galvanising during storage, transport or after installation.

Whenever the protective finish is found to be damaged after installation the Automatic Control specialist shall make good all damage to the satisfaction of the Client Representative.

Should any damage occur to a final finish applied by a manufacturer, the Automatic Control specialist should have the on-site repair carried out by the manufacturer.

Cable Entries

Removable undrilled gland plates shall be provided at the top and 230mm above the floor level for terminating all incoming cabling. These plates shall be non-ferrous for MICC cables. All plates shall be sealed against the ingress of dirt, dust and moisture. These plates shall be easily detachable for drilling purposes.

All entries for cables shall be easily accessible and marked to correspond with the panel wiring diagram and diagrams for external connections.

Internal Wiring

The main current carrying conductors of each main circuit from the incoming terminals shall be capable of carrying for one second without distress, the through fault current equivalent to the three phase short circuit of the system specified.
All controls and power wiring cables shall be tri-rated LS0H insulated cables 2491B/6710B to BS EN 50525 and shall be coloured in accordance with the IET Regulations to indicate differing phases.

The Contractor will ensure that all controls power required of whatever voltage emanates from these panels.

The Contractor will wire to the internal control panel isolator a suitably sized 3PH + N power supply. The isolator provided by the Contractor will be capable of being locked in the off position.

Power Wiring (220 Volts and Above)

All power wiring shall be kept physically segregated from all other wiring and the working voltage shall be indicated on the fixed portion of the associated terminal boards.

Wiring for mains voltage will be to the standard detailed in the electrical specification in phase colours with a minimum size of 7/0.67 mm single or multi-stranded as required. Where such wiring is to be carried across door hinges in looms it will be in flexible cable to the relevant BS with a minimum size of 50/0.25 mm.

Extra low voltage wiring will be carried out in flexible PVC insulated cable with an LSOH outer sheath to the relevant BS with a minimum size of 30/0.25 mm.
All LV wiring shall be 500V grade.

Wiring within the control panel will be carried out in colour coded. Black cables with colour coded ferrules will not be used for phase cables. Wiring within the panel will be colour coded:

Power circuits	–	Phase Colours BROWN, BLACK, GREY
Neutral conductors	–	BLUE
230V AC Control circuits	–	BROWN
Extra low voltage AC	–	ORANGE
Earth	–	GREEN/YELLOW.

Auxiliary and main wiring will be kept separate as far as practicably possible. All internal wiring will have numbered ferrules at each end and internal wiring will be securely fixed to the enclosures and will not impede the opening and closing of doors or removal of components. Where possible 'crimp' type connections will be used.

Cleats are to be fixed to the control panel structure at sufficient intervals to avoid cable sag. Adequate cable loops must be allowed to accessories on doors to avoid cable stretch.

Neutral Bar or Link

A neutral bar shall be incorporated within the panel and must be of sufficient size to allow for each separate circuit neutral conductor to be connected into a separate circuit terminal.

Arrangement and Installation of Wiring

All wiring shall, as far as possible, be grouped according to the circuits involved. It shall be run in insulated cleats of the limited compression type, flexible tubing, rigid steel conduit or plastic trunking and shall then be taken to terminal boards mounted not less than 230mm above the bottom gland plate or not less than 230mm from the top of the panel, as required. Sharp, tight bends shall be avoided.

All outgoing wiring will be clearly segregated with respect to the 230V and extra low voltage systems.

Bunching of cables into large looms will not be accepted. The maximum number of control cables in any one group will not exceed 25 conductors. Conductors for heavy loads will be routed to ensure adequate cooling and will be separated from control wiring. All unfused cables between bus-bars, isolators or fuses will be routed separately as individual looms.
All controls cables, be it analogue or digital, will be in screened multicore flexible cable. Extra low voltage wiring, and connections will be separated from the higher voltages.

Where plastic trunking is used, construction as detailed in the electrical specification, the cable will not occupy more than 50% of the trunking volume.

All control cables will be permanently identified by means of numbered ferrules. These numbers will be shown on the schematic diagrams where these are used for point-to-point wiring.

All parts of the panel including the door will be earthed. Earth continuity by means of door hinges will not be acceptable.
All incoming/outgoing terminals will be via screw type terminals.

The outgoing control circuits will be via knife-edge disconnect type isolators. The circuits will be fused such that each mechanical system has a separate fuse.

At the completion of the contract, all redundant cables within the panel shall be terminated in suitable connectors. All cables of this type will be marked as spare and identified on the record drawings along with the external routing of these spare cables.

All internal wiring is to be identified in the same manner as the internal wiring diagrams.

Cable Termination and Terminals

Each wire shall be separately terminated with an approved crimped terminal to suit the terminal used. All wires shall have numbered ferrules or sleeves at both ends. The ferrules or sleeves shall be of insulating material, which, except where otherwise specified, shall be white and shall have a glossy finish. The ferrules or sleeves shall be unaffected by oil or damp and the characters shall be indelibly marked in black.

Where internal wires connect to outgoing terminal with their other end on apparatus with terminal identification different to the wire number, this identification shall be shown on a ferrule or sleeve of a different colour to the one indicating the wire number. Both ferrules and sleeves are to be clearly visible when wire is installed, and the wire number marking is to be fixed nearest to the terminal. This secondary cable identification must be shown on the wiring diagrams.

The outgoing control circuits will be via knife-edge disconnect type isolators. The circuits will be fused such that each mechanical system has a separate fuse.

Wires shall not be jointed or twisted between terminal points.

Bus wiring shall be fully insulated and run separately.

Terminals and Terminal Boards and Connections

All terminals and terminal boards for small wiring shall be the crimped type terminals and for ease of maintenance shall be the snap-on type. For power wiring, terminal boards shall be of the stud type, the studs for which shall be positively locked in position without the use of locknuts. Pinch screw terminal boards will not be permitted.

Double banked terminal rails or terminal rails mounted on the sidewall of the panel shall not be provided.

All connections shall be made on the front to terminal boards. Current shall not be carried through the board by the stud.

Terminal boards shall have separate terminals for incoming and outgoing wires and not more than two wires shall be connected to any one terminal. 25% spare terminals shall be provided within each section of the terminal assembly. Insulated barriers shall be fixed between adjacent terminals. The height of the barriers and the spacing between terminals shall be such as to give adequate protection whilst allowing easy access to terminals.

Terminals must be provided for the incoming main cable so that the power-wiring Contractor does not have to terminate his cables straight on to the lugs of the main isolator. All terminals must be located so that they are accessible to straight screwdrivers and no terminals may be located behind fixed panel work.

No live metal shall be exposed at the back of the terminal boards. Terminals shall be provided for all spare cores of outgoing multi-cables, where indicated.

Any terminal which may be live when the panel is isolated from the supply shall be clearly identified and shrouded.

All terminal boards associated with circuits shall be provided with covers of transparent insulating material. Such covers shall be sectionalised so that groups of associated terminals may be exposed without uncovering the whole board.

Circuit identification shall be fitted to the fixed portion of terminal boards and not to the loose covers only.

Outgoing terminals connected to equipment with terminal markings different from the internal wires shall be indicated by a double sleeve or ferrule on the internal wires showing both numbers and in a distinctive colour. These shall be shown on all diagrams.

An allowance shall be made on the length of each wire at all connections in order to permit the cutting off and remaking of unsatisfactory connections.

Relays

All electrical relays used within the control panels shall be interchangeable and of the plug-in type with equal number of normally open and normally closed contacts of ratings adequate for their operating duties.

All relay-operating coils shall be rated for continuous duty and protected by a common control circuit fuse.

All relays for non-critical services shall have indicator flags and manual override switch. The relays associated with critical services such as the comms room cooling systems, life safety systems shall NOT be provided with manual override facility.

Control Circuits

Control circuits for new systems shall be 24V.

Where the control system is used as low voltage AC, a transformer shall be supplied a rating suitable for the control system load of the panel plus 20% spare capacity. The transformer shall be in accordance with BS EN 61558 and shall be provided with an external label of approved type and size letter to the Client Representative's approval.

The primary voltage shall be either 400 or 230 as detailed with tappings giving 410 - 420/430 - 440 or 220, 230, 230, 250 respectively and the secondary voltage (the control system voltage) at full load with rated primary voltage and load power factor of the system. The voltage regulation at this power factor shall not exceed 10%.

A continuous metallic screen shall be interposed between the primary and secondary winding. The screen, together with all non-current carrying parts, shall be bonded together and brought out to an external earth terminal together with either one pole of the secondary winding or the midpoint of the secondary wiring, depending on the system voltage.

Indicator Lights and Alarms

All power boards shall be provided with the following identification on the panel fascia:

- A panel identification label
- The manufacturer's name, construction date and serial number
- 3 phase power lamps
- MID approved electrical meter
- The source from which the panel is fed.

Each control panel will have as a minimum the following fascia indicators and switches:

- Controls healthy lamp
- A panel identification label
- The manufacturer's name, construction date and serial number.

Indicator lights shall be LED clusters.

Where indicator lamps are not immediately adjacent to their associated switches they shall be clearly labelled as per attached.

Common alarm lamp driven from BMS DO with reset button.

Power Meters

All power boards shall be provided with an incoming MID approved power meter complete with visual display and Modbus connectivity.
It should be noted that although inverters provide a power output reading this is not MID approved and therefore where billing is required the meter reading from the inverter will not be appropriate. If however meter readings are required for energy monitoring to meet the building regs then the inverter readings will be acceptable.

BMS Keypad and Display

Keypads and display panels shall be provided for all control enclosures, unless advised otherwise.
The display panels shall be a colour backlit touchscreen running a browser that should be used to display the embedded graphics held within the DDC control unit.

These displays shall include a user graphic of hand off auto switches and equipment running/fault status in place of physical rotary switches on the control panel fascia.

Current Transformers

Current transformers for the operation of the apparatus with which they will be associated and for the combined duty of over-current protection and efficiency test for the operation of instruments, metering equipment shall comply with the requirements of BS EN 61869.

Current transformers for the operation of the apparatus, with which they will be associated and shall, where appropriate, comply with the requirements of BS 7626.

Current transformers shall be constructed so as to withstand safely the mechanical and thermal stresses set up by a short circuit equal to the full short circuit rating of the associated switchgear. The secondary windings of each set of current transformers shall be earthed at one point only. Each such connection to the earth bar shall be made through a removable link placed in an approved position.

Current transformers shall be capable of withstanding for one minute, without damage, the effect of an accidental open circuit in the secondary circuit with full load in the primary.
The method of securing current transformers in position shall be such that no undue pressure is executed on the windings.

Fuse Protection

The Contractor shall be responsible for selection of and the setting of overload protection or installing fuses appropriate to the actual loading on each circuit.

Fuse Switches

Fuse switches shall be manufactured to comply with BS EN 60947-3.

Access to fuse links shall not be possible unless the fuse switch is de-energised. Likewise, it shall not be possible to close the switch while the cover door is open, unless the interlock is purposely defeated. Any parts which remain live when the front cover is open shall be fully shrouded.

All mechanisms shall be non-corrosive.

Arc resistant barriers shall be installed between phases in the vicinity of the arc path.
Isolating switches shall be manufactured to the same standards as fuse switches and shall have fuses replaced by solid links to allow future upgrading to a fuse switch if necessary.

Miniature Circuit Breakers

All miniature circuit breakers shall be rated to withstand the fault currents of the circuits they protect without causing any interference in any other protective device associated with the distribution system. At the same time, the design of the circuit breaker shall be such that it will protect the circuit for which it is intended and not cause or allow other protective devices to operate when fault conditions apply.

Miniature circuit breakers shall be manufactured to comply with BS EN 60898. Circuit breakers shall be type A, B, C or D as appropriate.

All miniature circuit breakers shall be rated to withstand the maximum fault current attainable in the circuit they control.
Where the fault current level is higher than the maximum breaking capacity of the breaker, suitably rated back up fuses or moulded case circuit breakers shall be installed.

The operation of the tripping mechanism shall be instantaneous under short circuit conditions. The fitted magnetic thermal or magnetic hydraulic time delay shall be designed to give a delay on tripping inversely proportional to the magnitude of the circuit current.

Residual Current Operated Circuit Breakers

All residual current operated circuit breakers shall comply with BSEN 61009.

Earthing

All non-current carrying metalwork of the panels shall be suitably and adequately bonded to the main earth bar to form an integral part of the panel.

The earth bar shall be high conductivity copper for each panel and shall be sized to suit the fault level specified on the main single line schematic diagrams.

A 25mm x 3mm earth bar shall extend the full length of the panel and supported at intervals not exceeding 1m.
The earth bar shall be bolted to the main frame of the panel and be made suitable for coupling earth bars of adjacent switchboards. All joints shall be tinned, sweated and bolted. Connections to the main earth bar shall be taken from all panel instruments, relays, meters, star points of current transformers and voltage transformer metal enclosures.

Hinged panels or doors shall have flexible earth connections to the panel main frame, which shall be of a minimum conductor size of 4mm2.

Earth continuity on bolted sections shall be achieved by removing any excess paint from bolts or studs before washers are fitted.

Laptop Power

A twin socket with RCD protection shall be installed in the controls section of the panel.

Laptop Shelf

The CE shall include a drop shelf for a laptop table.

Drawing Holder

The control panel manufacturer shall provide within the panel a waterproof rigid plastic container fixed to the inside of one of the access doors. Immediately after commissioning, the Contractor is to place in this plastic container a complete set of panel internal wiring diagrams, external wiring diagrams, fuse charts, spare parts list, maintenance and operating instructions. These are related to the control panel and are additional to any record drawings called for elsewhere.

Ease of Maintenance

The equipment shall be constructed to facilitate maintenance. All parts subjected to heavy wear, and which may need replacement in the course of normal maintenance shall be capable of replacement without major dismantling of sound parts of the equipment.

All specially fitted parts, such as doors shall be clearly marked in relation to their housings to ensure that they cannot be inadvertently interchanged with other similar parts in the equipment.
All panel keys will be the same type.

Component Labelling

All components shall be labelled or otherwise designed to permit them to be readily identified on the circuit diagram.

In the case of any small components, which may be replaced as unit in the course of maintenance, the labelling should preferably be on the equipment adjacent the component, and ideally engraved on the trunking lid in white letters 3mm high on a black background.

All sections of trunking lid shall carry identification references at each end to facilitate correct replacement within the panel.

Name Plates and Labels

Nameplates and labels shall be provided for all starters and items of equipment on the panel front. The labels shall be non-corrosive metal or traffolyte phenolic engraving material. They shall be engraved to give black letters on white background.

Where ‘DANGER’ labels are required, these shall be white letters on a red background.

All identification plates shall be held in place by escutcheon nails, screws or rivets, finished black in colour.

Each section of the panel shall be identified by a nameplate either reading 'Control Section' or 'Power Section' in addition; all sections shall be identified by a nameplate reading 'Danger 400V or 230V Live Terminals' as appropriate.

In addition, each panel shall have a panel reference and manufacturers nameplate.

4.9 Cables

The cables and carrier installation shall be provided by the BMS specialist.

All cables shall be manufactured by BASEC approved company.

All control cables will be to suit the Contractors system with the minimum sizes as detailed in this document and finished with an LS0H outer sheath.

All power cables will be sized by the BMS specialist to achieve minimal Volt drop.

All cables in a common carrier system shall have the same insulation rating.

Cables within panel shall be tri-rated.

PVC cabling shall not be installed outside of the control panel.

Power cables shall generally be to BS EN 50525.

4.9.1 Control Cables

The BMS specialist shall provide all control wiring and carrier systems for equipment connected to the panel is provided by the BMS specialist. The use of PVC cabling is not permitted; all cables shall have a LSOH outer sheath. Tested in accordance with BS EN 60754 and BS EN 60332.

BMS extra low voltage cables will have a minimum cross-sectional area of 0.75 mm2 (7/0.37 mm dia) with due regard to cable resistance for sensors and shall be in conduit or trunking all final connections to equipment shall be via flexible steel conduit. Loose laid controls cabling is not permitted.

All controls cabling shall be screened and shall be located at least 200mm from any power cabling and not run parallel to the ELV/LV system cables.

All controls cabling will be screened, installed within conduit or trunking have a LSOH outer sheath. The final connection to devices may be through flexible galvanised conduit.

All low voltage cables will be single core insulated Butyl, with an LSOH outer sheath and screened if necessary, to the relevant specification, having stranded copper conductors. All BMS system wiring will conform to the current edition of the IET regulations. Cables will not be connected directly to the outstations. All cables will terminate at screwed terminals and subsequently be wired to the outstation. Electrical screening will be provided to the extra low voltage cable by the use of screened cable.

All BMS wiring will be carried out in twisted pair cables, each pair being individually screened. If multicore cables are used then, if acceptable to the BMS specialist, a common outer screen may be employed. Multicore cables may be used so long as all conductors are terminated on the outstation. Any unused conductors will be terminated to earth at both ends.

BMS extra low voltage cables will have a minimum cross sectional area of 0.75 mm2 (7/0.37 mm dia). With due regard to cable resistance for sensors.

Low voltage cables will have a minimum cross sectional area of 1.5 mm2.

Screening will be provided by an aluminium/polyester foil shield with a multistrand drain wire (7/0.37). All low voltage BMS cables will be sheathed in LSOH material.

All controls cabling, including the BMS network will be installed in conduit or trunking.

4.9.2 Power Cables

All cables shall be manufactured by a BASEC certified company, the use of PVC is not permitted.

All power cabling shall be installed in conduit, trunking or on tray as appropriate. All power cables shall be single core LSF in conduit with XLPE/LSF/SWA being used on tray or any exposed surfaces. Low voltage power cables shall have a minimum CSA of 2.5mm2.

Whenever power cabling is provided as part of the works shall include all carrier systems, isolators and final terminations.

4.10 Cable Carrier Systems

The cable installer shall provide all carrier systems.

4.10.1 Cable Cleats and Supports

All cleats or supports for single core cables shall be manufactured from non-magnetic material.

4.10.2 Cables Run in Service and Pipe Ducts

Cables run in service ducts shall be run at least 25mm clear of walls on galvanised steel hangers or claw type clamps.

4.10.3 Cable Carrier Systems

All cables shall be in conduit, trunking or on trays as appropriate.

4.10.4 Cable Trays

All cable trays shall be manufactured from sheet steel to BS1449 and to a galvanised finish to BS EN ISO 1461.

4.10.5 Cable Racks

Cable racks shall be manufactured of mild steel channel sections to BS1449 Part 1 and hot dipped galvanised after manufacture to BS EN ISO 1461.

4.10.6 Fixings

Fixings to brickwork and concrete shall be by woodscrews and suitable raw plugs, grouted type bolts or expanding bolts.

4.10.7 Trunking

All steel trunking shall be manufactured from rust proofed mild steel to BS1449 Part 1 and hot dipped galvanised to BS EN ISO 1461 after manufacture. Trunking shall also comply with BS EN 50085.

4.10.8 Conduits

Steel conduits shall be Class 'B' heavy gauge seam welded type and shall be manufactured to comply with BS31, BS EN 60423, BS EN 50086.

4.11 Earthing

The Contractor shall install all earth bonding of services provided by themselves. Earthing systems shall fully comply with the current edition of the BS7671 and BS 7430.

Protection against indirect contact shall be by utilising the over current protective devices for earthed equipotential bonding and automatic disconnection of supply.

All metalwork which may provide a path to earth shall be bonded to the earthing system.

The resistance between any points on the bonded system and main earth shall not exceed 0.5 ohms.

Low voltage switchboards shall be provided with a 25 x 3mm copper tape to which all-electrical apparatus shall be connected to form a continuous bonded earth system directly connected to the earth point.

Tapes 25 x 3mm shall be fixed at intervals not exceeding 600mm intervals.

All extraneous conductive parts and metalwork shall be solidly bonded by supplementary bonding conductors of minimum size 6mm2.

Cables shall be LSF sheathed and coloured Green/Yellow.

All bonding conductors shall be concealed by a surface or flush conduit system as appropriate.

All protective conductor cables shall be connected by properly sized lugs crimped to the cable.

4.12 Circuit Identification and Labelling

All switch fuse gear shall be clearly identified with an engraved three-part laminate 'traffolyte' label with a minimum of 6mm high black lettering on a white background to show their functions.

Standard colour phase buttons shall be fixed on the outside of all switch and fuse gear to indicate to which phases of the supply the various circuits are connected.

All labels and phase buttons shall be secured by brass BE instrument headed bolts and nuts and each label shall be fixed with at least two bolts.

All switchgear shall be labelled with the number detailed on the electrical drawings together with a description of its function.

Each distribution board shall be fitted with a clear plastic wallet on the inside of the enclosure door and be fitted with all relevant distribution board charts for individual circuits showing circuit reference, description and number of points fed, location, cable size etc
The drawing shall be to the size of the original schematic working drawing.

All danger and warning labels shall have black lettering on a yellow background.

All proposed label inscriptions shall be submitted to the consulting engineer for approval prior to installation.

All external lights, switches and other remote circuits shall be labelled with the circuit reference to which they are served from.

Identification markers for cables etc shall clearly identify the circuit reference or cable number.

4.13 IET Wiring Regulations and British Standards

Full compliance is required with the current edition of BS7671 and all relevant British Standards Codes of Practice including all amendments thereto current at the date of tender.

Full compliance will be required with the latest appropriate British Standards Specifications issued in respect of all materials used on the project.

4.14 Electrical Services Testing and Commissioning

Upon completion of the works, the whole installation shall be inspected and tested by the Contractor in accordance with the IET Wiring Regulations and shall submit the completion and test certificate forms for approval by the consulting engineer.

4.15 Inverters

The Contractor supplying the inverter shall set to work and commission the units to match the BMS operations. The inverter supplier shall be responsible for all technical aspects of the inverters as described both in the mechanical specification and within this document.

The BMS specialist shall, however, provide management of all inverters and shall provide support during commissioning to establish the operation of all inverters.

All inverters shall be placed local to the plant and shall be IP54 rated. If the plant is external to the building, the inverter shall be located either in the plant housing or in an IP 65 enclosure provided and installed by the inverter supplier. Any externally mounted panels shall be provided with internal heating by the panel provider.

All inverters shall be complete with RF filters.

All inverters keypads shall be brought to the front of any enclosure, allowing operation and interrogation without opening the panel and where mounted external to the building shall be covered with a weather proof but clear plastic lid.

All inverters provided for the contract shall be to the standard described in this specification. Under no circumstances shall inverters require the exclusive use of remote wireless connected device, and every inverter shall have a physically connected visual display of the operating parameters and allow local manual operation. Every inverter shall be provided with a separate pair of terminals that can be configured as a safety interlock.

All inverters associated with ventilation systems shall have programmable terminals for fire override and Jog speed commands.

All inverters shall have programmable inputs that form part of the safety circuit that prevent operation either locally or remotely unless this circuit is healthy.

Where isolators are provided for an inverter these shall be complete with early brake/late make auxiliary contacts that shall be wired as part of the enable circuit to the inverter.

Where the AHU is provided with an inverter this shall be mounted in an IP 5X enclosure on the side or local to the AHU. The inverter shall be complete with BACnet/Modbus for high level integration to the sitewide BMS with hardwired connections for enable/speed control and status monitoring.

4.16 EC Motors

The AHU specialist when providing EC motors shall interconnect all internal motor power requirements and terminate in a common lockable 4 pole isolator mounted on the outside of the fan enclosure. The AHU specialist shall interconnect the Modbus monitoring circuitry for each motor drive and terminate in a junction box in the outside of the fan enclosure. The AHU specialist shall provide interconnecting cabling between all motors for the common external 0-10 V speed control signal and the enable signal and terminate this in a suitable junction box on the outside of the fan enclosure.

The monitoring of the fan status (running/fault) shall be via a common output interconnecting between the motors and terminating at a volt free contact in a junction box on the fan enclosure.

The Modbus shall be used for general motor monitoring.

As it is not possible to provide manual speed control by using local keypads (as is possible with an inverter), the Automatic Controls specialist shall provide this function using the AHU controller. To achieve this the AHU keypad shall provide user graphics allowing plants to be set to manual control and user adjustable knobs to set the operating speeds of the drive.

4.17 Field Mounted Equipment

All field mounted equipment shall be suitable for the environment in which it is located and/or operating. Equipment outside the building shall be IP65 rated without the use of protective bags.

All controls field devices shall be ELV.

All field mounted control devices and cables will be of the 24V type. If field mounted equipment provided by others operates from a 230V control circuit, then the BMS Contractor will install an interposing relay either within the OEM plant or immediately adjacent to it.

4.17.1 Valve and Actuators

The actuators are to be suitable for the driven device and valves shall not be of the thermic type, shoe type or driven by raise lower modules. All valves, other than those associated with terminal units such as fan coils, shall have external position indicators. All valves other than terminal units shall have end switches for open/closed valves and potentiometers for modulating valves. These shall be wired to the automatic control system for status and mismatch monitoring.

Any flying leads associated with the actuators are to be of a LSOH material and have a maximum length of 1500 mm. Where the dampers are used for fire or smoke control the control cabling shall be fire rated.

In the event of power supply failure, all safety valves shall be arranged to either close or open to reach a safe condition.
The hydraulic static pressure can be considered to be sixteen bar with a differential of 500 kPa.

All control valves shall be 0-10V modulating 2 port PICV. The controlling section of the control valve shall be provided with full travel irrespective of the adjustments required to set the maximum flowrate.

4.17.2 Damper Actuators

All damper actuators shall be sized to suit the damper torque. For tender purposes, each actuator shall be limited to 1m2 of damper area. All damper actuators shall have external indicators. All damper actuators shall have end switches for monitoring purposes.
Any flying leads associated with the actuators are to be of a LSOH material and have a maximum length of 1500 mm. Where the dampers are used for fire or smoke control the control cabling shall be fire rated.

All equipment will be suitable for the environment in which it is to be placed. This, for example, means that any device located outside of the building envelope will be IP65 rated. The use of protective bags is an unacceptable solution.

4.17.3 Sensors

All sensors shall be selected to CIBSE standards and installed in accordance with the Building Controls Group document – Control Sensor Installation.

Temperature Sensors

Shall have an accuracy of +/- 0.5oC and a yearly drift of not more than 0.1K per year and a hysteresis value of less than 0.05%.
Room air types.
Will have an accuracy of + 0.5K will be fixed in a representative location, be positioned approximately 1.5M above finished floor level and be at least 0.5m away from any part of the heating or cooling system where fitted. Will operate on extra low voltage and be suitable for mounting on British Standard conduit boxes.

Duct/Equipment Mounted Types

Will have an accuracy of + 0.5K will be positioned so that the element is not subjected to radiant effects of heater batteries etc, be positioned such that account is taken of the worst cases where temperature stratification is likely to occur so that they give a representative temperature, be securely fixed to the duct wall.

Be resistant to shock and vibration and be enclosed within suitable enclosure. All duct-mounted sensors will be mounted such that the element sensor across the duct and that unit is fixed on a mounting flange.
Pipe mounted types.
Will have an accuracy of + 0.5K will be provided with a pocket to allow withdrawal for servicing, and inspection, without the need for draining the system, be installed in the pocket using a silicone gel or similar non corrosive heat transfer medium. Will be positioned so that the active part of the element is wholly submerged in the liquid.

The combined pocket and sensor will have a 50 mm extension such that they stand clear of any insulation.

Will be positioned so that the element is not less than 12 pipe diameters downstream from a mixing point and that the temperature at the centre of the pipe is measured.

Humidistat

Humidistats will have a suitable sensing element and be fully proportional or two position to meet the control requirements. The humidistats will be resistant to shock and vibration and will be enclosed within a tamper proof cover.

Thermostats

Thermostats sensing outside air, return air and water temperature will have liquid filled bulb type sensing elements. The thermostats will be fully proportional or two position, as determined by the system requirements and will be direct or reverse acting as required. Ranges will be suitable for the application and the instruments will be fully resistant to shock and vibration.

Thermostats sensing water temperature will be supplied with a pocket to allow withdrawal for servicing, and inspection, without the need for draining the system, be installed in the pocket using a silicone gel or similar non-corrosive heat transfer medium. Will be positioned so that the active part of the element is wholly submerged in the liquid. The combined pocket and sensor will have a 50 mm extension such that they stand clear of any insulation. Will be positioned so that the element is not less than 12 pipe diameters downstream from a mixing point and that the temperature at the centre of the pipe is measured.

All temperature sensitive devices will be positioned or protected from the effects of radiation.

Where thermostats are used for frost protection, high or low flow temperature they shall be of the auto-reset type unless otherwise indicated.

4.18 Heat Meters

The heat meters class 2 MID approved and shall be supplied and installed by the BMS specialist. The meters shall be of two types:

Packaged type that would include an ultrasonic flow measuring section, 2 matched temperature sensors and the integrator. The integrator shall have BACnet connectivity and be connected to the sitewide BMS/EMS
. Generally this type will be used for billing and is generally found within heat interface units and the like. These heat meters shall be provided with dual communication cards allowing one to be connected to the sitewide BMS and the other if required connected to a tenant monitoring system. The integrator shall be complete with 2 spare pulsed inputs that can be used for monitoring such things as water meters and electric meters. The integrator shall be 24 Volt powered and complete with battery backup a minimum of (12) months operation.
Ultrasonic flow meter with 4 to 20 mA output, matched temperature sensors. The flow meter and temperature sensors shall be wired to BMS outstation where energy calculations shall be carried out.

The power to heat meters shall be 24 Volt and derived from BMS outstations.

4.19 Electric Meters

The electric meters shall be class 2 MID approved and shall be supplied and installed by the BMS specialist where required for MCC panels and the like with the electrical contractor providing meters in switchboards and distribution boards.
The meters shall all have Modbus connectivity for connection to the BMS/EMS.

4.20 Guarantees

All control valves and damper motors shall have at least one-year manufacturer's guarantee. There shall be a similar one-year minimum guarantee on all the controls manufactured by the contractor.

4.21 Software

All software and firmware shall be supplied to include all the functions generally described in this specification.
Restriction of access to the system for security proposes shall be accomplished by provision of a software based password system.
The basic algorithms necessary for all the software shall be produced by the automatic control specialist after consultation with the Client Representative and then programmed into the system. It is the automatic controls specialist responsibility to design and produce the software and ensure it adequately performs the required tasks.

The software should be written in such a way that the user can have sufficient access to alter significant parameters in relation to the operation of plant. The purpose of this requirement is to allow alteration of plant systems operations, either because of plant modifications or additions, or because experience in use shows that alteration is necessary. This applies whether the routine is provided in standard form or is specially written for the Employer.

All system references to dates shall be in calendar form, e.g. 25.09.2020.

4.22 Direct Digital Control (DDC)

This is the use of software-based algorithms, to achieve on/off proportional, proportional plus integral and proportional plus integral plus derivative control loops. The control parameters will be adjustable by keypad operation and via a laptop.
The automatic control specialist will determine and include in the tender bid, the most appropriate form of control to each system.

The software will be suitable for at least four sequential stages of control, the provision of dead zones between stages, control point reset, compensated stages and hardware and software override functions.

The automatic control specialist will be responsible for setting up the software parameters for each process loop, including the setting of the proportional bands, integral times and derivative rates, which will all be site adjustable and recorded in engineering units. All settings will be such that each process loop performs within the required tolerances and that there is no hunting (cycling) of final control elements.

A complete schedule of settings will be provided at final acceptance. The facility will also be provided for the operator to change, via password access, the settings for all process loops.

DDC will normally be operated from software resident in the outstations. DDC software held in outstations will be capable of stand-alone operation, with supervisory commands normally being received from the graphical user interface. In the event of failure at the outstation, the process plant will fail-safe. No DDC loop will be dependent, for normal operation, on the uninterrupted operation of the CPU.

4.22.1 Logic Diagrams

The Automatic Controls specialist will provide a full set of flow charts or logic diagrams to show the software logic for all the performance requirements of each and every plant. These charts/diagrams will describe both the logical sequence and priority levels of all functional and sequential operations.
The system will be designed to fail safe in the event of outstation mains power failure.
The as built logic diagrams will form part of the O&M manual information.

4.22.2 Non-Corruption of Software

The system as a whole shall be designed so that software has adequate protection from corruption arising from:
Disturbances due to magnetic, electrical, atmospheric or environmental influences, including noise or failure in the electrical supply
Switching either the Central Controller or peripherals or outstations on or off
Testing either the Central Controller or peripherals or outstations.

In the event of software loss, due to failure of power supplies or for other reasons, it shall be possible to re-establish the system software, including such parameter settings as were previously in use, by re-booting from disc. The responsibility for updating back-up discs of system software, from time to time, shall be the Employers, but the provision of such a facility shall be made by the automatic control specialist.

Note that any software ‘permanently’ held in devices such as ROM, which are intrinsically non-volatile, need not be backed up by disc storage, but details of user specific data must be provided.

All programs will be tried and tested standard programs. The use of unique programs unless for special control functions will not be permitted. If the BMS specialist considers that special programs are required then these will be clearly identified at the time of tender.

The automatic control system will be provided with software programs capable of providing the facilities and features detailed in the specification. The Automatic Controls specialist will demonstrate the operation of each program at his works. The demonstration will include whatever validation tests are required by the Client Representative and be carried out in his presence.

All stipulated software will be provided irrespective of whether the performance requirements or detailed point schedules include for the particular facilities, so as to permit future extensions to the system by the addition of further sensors, detectors, outstations and associated wiring, and/or the input of extra data for various programs.

The master format user interface to the software programs will permit non-skilled operators to operate the normal routines for the plant systems by plain English screened messages, which provide question and answer routines and/or menu type solutions to the standard programs. A ‘HELP’ or ‘SOS’ input routine will be provided, with a printed instruction card, in order to gain initial access to the various software facilities.

All data and messages displayed on VDU's and printers will be prefaced by the date and time at which the event occurs.
It will be possible to assign values, from the keyboard to any digital, analogue or measured signal so that the specified performance responses may be checked and tested against the requirements.

4.23 Network Transmission Speed

The software and hardware configuration will be such that data transmission and operational sequences do not obstruct each other and cause delays to, or erasures of, the receipt of alarms, analogue and graphic displays and the input of keyboard commands. The following specific requirements will also be met:

- Critical alarms will be displayed within 5 secs of occurrence
- Normal alarms will be displayed within 10 secs of occurrence
- Graphic displays will start to be displayed on the screen within 5 secs of the command for such a display and be completed within 10 secs of the command, complete with actual values, alarm values and status.

The value of all analogue inputs will be checked at intervals not exceeding 10 secs, unless otherwise stipulated. Where shorter intervals are relevant, because of short time constants in a system they will be used. The graphics will be automatically refreshed every 10 secs.

4.24 Access Levels

Operator access to software for amendment, updating and changing of parameter values will be at several different levels ranging from direct access, through a minimum of four levels of password security.

The Contractor will:

- Provide, to the Client Representative, access to the software of the system and details of password security up to the highest operator level, in order to permit listings to be changed on site
- State which application software programs are run in the outstations, which are run from the CPU, and the level of updating possible for each, from the CPU and at the outstations
- Include for programming all the functional sequences detailed including printed messages and the generation of colour graphics to include every point on the system
- Provide sample drawings of the graphic diagram layouts, for comment, prior to production and demonstrate such graphics prior to site delivery, for approval by the Client Representative, at least two months before the programmed project completion date.

The Client Representatives reserve the right to be directly involved in certain aspects of the software development e.g. design of the colour graphics and printed messages.

Level One Password

This will allow access to all graphics and data including printing of data. It will not allow any changes to be made to the system.

Level Two Password

As level, one plus amendments to all time zones and amendments to all set points.

Level Three Password

Complete access to the BMS excluding alterations of the control strategy but create own software, create graphics and alter operator passwords.

Level Four Password

Complete access to the BMS.

4.25 Head End Manual Control

All connected points will be equipped with a simple facility to be 'taken out of auto' and placed in 'manual' control at the central (BMS) workstation. This function will be operated from the graphical operator interface and will allow operators to be quickly able to raise and lower set point or drive a point open/closed. Similarly, plant such as pumps/fans/dampers will be manually driven if required whilst retaining all safety interlocks.

4.26 Historical Data Programme

The software will enable the storage of specified historical data. The data storage will be capable of holding the information for predetermined periods, for accessing as required, and will then dump the most ancient as more input is loaded e.g. if monthly data is required for a period of a year then the first month will be discarded when the thirteenth month is complete.

The data to be stored will be that specified, and the automatic control specialist will set up the system to incorporate these requirements, but the operator will have the facility to alter or amend the instructions subsequently. The program will be capable of transmitting raw data to store or data that has been refined by calculation by other software programs. The program will also calculate average, mean and standard deviation values of the data prior to storage.

The data logging will include both real time, displayed on the screen, for short-term review and long term historical records. The historical records will allow logging intervals to be adjusted between five seconds and one hour time periods. The intervening times will be as a minimum one thirty seconds, one minute, five minutes, fifteen minutes and one hour.
The operator will be able to request visual or printed displays of any or all this stored data and the facility will also be provided to transfer the data directly to Excel spread sheets for further manipulation by the operator.

Hard drive storage for the necessary data will be provided as part of the BMS. This shall be capable of storing, as a minimum the following data:

- Analogue inputs – 50% of installed at 1 minute intervals for 1 year
- Analogue outputs – 50% of installed at 1 minute intervals for 1 year
- Set points – 50% of installed at 1 minute intervals for 1 year
- Digital inputs –100% of installed 1000 change of states
- Digital outputs – 100% of installed 1000 changes of state; and
- Energy metering record retention is detailed in the appropriate sections.

4.27 Event Totalisation

The outstation will be programmed to count events such as the number of times a pump or fan system is cycled on or off during a particular period. Event totalisation will be performed on a daily, weekly or monthly basis. The software will be programmed to define a pre-set warning limit. Unique operator specified messages will be generated when the limit is reached at the user interface.

4.28 Sensor Default Control

Where sensors, used for controlling plant, fail during operation the controlled devices or the measure sensor value will default to an agreed value.

4.29 Thermal Control

The software will allow PID control, resetting, cascade and the like to facilitate the thermodynamic control of the systems.

4.30 Pressure Control

Fans and pumps will when required be speed controlled by an inverter to achieve the system operating pressure set points. The pressure set points will be adjusted between limits such that at the lowest possible speed the system characterises are achieved.

4.31 Control Valve and Actuator Cycling

A function will be programmed within the software to cycle all actuators through their full range of movement once in every 24-hour period. The cycle will be finished in one complete operation. This operation will be automatic and in addition to the normal control or manual operation. Actuators will be cycled at a suitable time to be agreed with the Engineer, alarms will be inhibited as necessary. The operator will have the option to select any items that are to be excluded from this routine. A report will be generated if positive feedback devices are installed and a mismatch between the cycling and the response is detected.

A separate function will be programmed in all control software algorithms to drive actuators to their open and closed position on a plant maintenance cycle. This routine is primarily aimed at terminal unit devices such as fan coil units that are not provided with a positive feedback signal. The routine shall be initiated either manually from the head end or via a timed programme. Care shall be taken to ensure that the cycling does not have an adverse effect on the normal plant operation. When required the heating plant and the distribution system shall be set to work to ensure that hot water > (60)°C, is available at the terminal units. In a similar manner the central chilled water system shall be enabled to provide water at < (15)°C When operating the cooling valves shall be driven fully open for (30) minutes then closed, the heating valves shall then be open for (30) minutes then closed. The automatic control system shall review all entering and leaving air temperature sensors to determine that the air temperature fell and then rose to reflect the valve operations. Systems that show mismatches shall raise an alarm and generate an automatic report at the head end. To achieve these reports all terminal devices will be fitted with air inlet and discharge temperature sensors.

4.32 Alarm Programme

The software within each outstation will scan all alarm inputs in less than five second intervals. On an alarm being generated, the software will take immediate action to rectify the fault.

The alarm will report the status to the user interface where the current function will be halted until the alarm is acknowledged. The acknowledgement will be via password authority. The VDU will clearly show that an alarm has occurred, and a brief description be displayed.

The program shall allow the operator to easily change or define each message. Each message will be entered by the automatic controls specialist from an agreed schedule. The sitewide control system shall be configured to transmit the alarm and an English language message to specific email address.

All consequential alarms shall be supressed.

4.32.1 Plant Mismatch Alarm

Every point will have mis-match alarms set. These include fans and pumps running when told to stop, fans and pumps stopped when called to run, temperature values outside of acceptable range e.g. supply air temperatures < 8°C, >30°C room temperatures < 16°C, > 26°C, chilled water temperatures 2°C above set point, heating systems 5°C above or below set point.

4.32.2 Alarm Inhibition

When an alarm condition is displayed, it will be independent of any other possible alarm or cause that may initiate a string of further alarms. Where such circumstances occur, the software will inhibit any such sequential alarms. The automatic control specialist will co-ordinate such sequences in his detailed design and submit details sufficient to demonstrate compliance with requirements.

The program will inhibit analogue alarms when the associated plant is switched off by the automatic control system. The program will inhibit analogue alarms during the start-up of each plant item. This delay time period will be for a maximum of ten minutes to enable the building service installation to reach stable conditions.

Digital alarms will similarly be delayed at plant start up times for one minute. During normal operation every alarm point will have a timer than can be set during commissioning to illuminate nuisance alarms.

4.32.3 Head End Alarm Reset

A single reset 'button' will be displayed on each graphic. This will allow any alarm on the displayed system to be reset. This reset action will be recorded on the hard drive and printed. The message will show the fault reset set, its identifier, the operator who reset and the date and time.

4.32.4 Control Panel Alarm Reset

A single reset 'button' shall be provided on the control panel fascia. When operated all current alarms in the local outstations shall be cleared. This reset action will be recorded on the hard drive and printed. The message will show that the reset has been operated along with the date and time.

4.33 Run Time Totalisation Program

A run time totalisation program will be provided for application to all items of plant. The system will initiate an identifiable alarm output whenever the pre-set limit has been exceeded for the particular item. The run time will be determined from positive use of the plant such as differential pressure or running signals from packaged plant.

The run total will be accessible by command from the operator, who will also be able to reset the limits or zero the count for each item, using suitable password access.

Sufficient BMS hard disk storage will be provided to hold all data, for all motors, for two years.

4.34 Network Security

The BMS Installer shall follow IT best practice with regards to the security of the BMS network. This shall include, but not be limited to:

- Replacement of default usernames and passwords with strong passwords (A strong password consists of at least six characters (and the more characters, the stronger the password) that are a combination of letters, numbers and symbols (@, #, $, %, etc.) utilising both uppercase and lowercase characters)
- Disabling of unnecessary network services (Ensure that default services running on the network hardware, such as Telnet or HTTP, are disabled)
- Restriction of access to hardware management settings by IP address and/or device MAC address
- Disable of switch ports that can be physically accessed by general users if not assigned to specific devices or services
- Network devices shall have broadcast storm protection enabled
- Enable MAC address filtering lockdown on the BMS network where this feature is available
- If the BMS is connected to the web/internet, suitable firewall protection shall be provided.

4.35 Graphics

The BMS specialist shall provide dynamic graphics for all field and virtual points associated with the project.
The controls specialist will allow sufficient time for the production of the graphics. The controls specialist will propose a graphic layout and tree structure, system mismatch and alarm indication. These will be agreed by the Client Representative before detailed graphic are produced.

The controls specialist will supply sufficient software and training to allow the operator, post contract, to construct fully functional dynamic graphics. The dynamic points will include all installed equipment and allow the operator to build graphics and manipulate the points to provide full read and write functions.

4.35.1 General

Every field and virtual point of the system is to be displayed as a dynamic value on the appropriate system graph. The graphic display is to be as clean as possible and constructed in a simple to read form.

The controls specialist shall provide dynamic graphics for all plant that the BMS controls and monitors.

The operator interface to the BMS will normally be through the dynamic graphic route. It is therefore important that the structure of the layers is simple to follow and meaningful. The controls specialist may suggest any reasonable solution.

The following is for general guidance.
The log-on page will be a simple and clear text driven page with fields for the operator name and passwords. This will then access a silhouette of the building.

Where more than one site is accessible from the head end these will all be displayed on a site plan with identifiers and click boxes

The building silhouette will be divided floor by floor. Each major plant floor area will be identified and accessed through the click boxes

In addition to all the necessary major plant graphics each floor will be accessible. The floor selected will be shown in plan view on the screen. The offices and cores on the floors are to be shown with reasonable accuracy. Each area is to be identified either by a room number or name. Where terminal devices are installed to service the various areas these will be accessed by active click boxes in the areas served. The click box will not be positioned where the plant is located

The floor plan overview will show the current values of any field mounted sensors. If the floor plans are too large to be easily shown on one screen then multiple screens will be used. The terminal temperatures in each office or core area are to be displayed in the appropriate space on the floor plan.

4.35.2 Movement Between The Graphics

Each graphic will have click boxes to allow logical movement within the system. Every graphic will allow access to be gained to the overview graphic, associated air handling systems, return to previous and the home page.
Large systems that require multiple graphics will also have click boxes to route to the next part of the system.

4.35.3 Data Display

Wherever possible information is to be provided by means of colour change. All devices in their normal off state are to be orange. All devices in their normal on state are to be green. All devices in an alarm state are to be red. Wherever possible the command and feedback status are to be linked on the screen. For instance, a fan/ that is shown graphically as a triangle within a circle will be dynamically activated as follows.
The triangle will represent the command with the remainder of the circle indicating the feedback.

4.35.4 Overview Graphic

The BMS graphics as well as including all plant and equipment shall be provided with one overall graphic that displays the status of every plant item. This graphic may be a text based system with red, amber, green indication for each system. the system shall include all central plant systems. Jump tags shall be provided for each system allowing the user to immediately access the appropriate graphic.

The graphic shall display all central plant heating and CHW flow and return temperatures and flow rates.

4.35.5 Alarm Indications

Whenever an alarm occurs and where ever the user is within the graphical system a clear banner shall be displayed on top of any current display. Jump tags shall be provided from this alarm display to the appropriate graphic.

4.35.6 Specific Graphic Displays

The configuration of proprietary Building management System head end supervisors are each slightly different and it is recognised that each may have particular operations peculiar to its self. The following set out the minimum requirement from each system, further standard enhancements that are available will not be disabled even if they are not described below. Each plant item will be displayed on a separate graphic. The graphic display will be as clean as possible and indicate only the current plant status such as:

- Drive status – on/off/fault
- Valve and damper status – open/closed/modulating position
- Sensor status – current values
- If the devices are currently under 'manual' command from the head end via an operator instruction this will be clearly indicated alongside the device; and
- Alarm reset button
- A text table at the bottom of the graphic will show the current desired status of the controlled devices
- The reason that the plant is operating, this may include: Manual override from the head end, frost protection, warm up, cool down, occupied time, remote system demand, for
- Fixed set points such as air temperatures: which the system is attempting to achieve
- If set points are automatically adjusted by the operating software these set points will be indicated
- Any current system alarms
- If the device is a terminal unit such as a fan coil unit or fan powered mixing box, the primary air temperature serving the plant will be displayed.

An associated engineering table or pop up dialogue boxes will describe the following features and allow, with suitable passwords, the adjustment of the operating parameters:

- Systems comprising run and standby drives, the display will indicate the present lead drive
- Operator ability to change duty or prevent duty rotation, change the time and date of next rotation
- Drive run hours since last reset, maintenance run hour intervals, reset run hours to zero, adjust maintenance run hour intervals
- Operator ability to change between limits the system operating set points such as return air temperature, room air temperature, return air RH, room air RH

- It should be noted that it will not be possible to adjust, without changing the software coding such parameters as, air quality set point, maximum CO set point, maximum CO2 set point

- Operator ability to manually set valves and dampers to fixed positions
- Operator ability to set motor speed to a fixed value
- Operator ability to set motors to auto/manual state On or Off.
  - This operation merely bypasses the normal BMS demands, it will not negate any safety interlocks. If the plant is operating and 'manual off' is set the plant will shut down through its normal shut down routine. If the plant is off and the 'manual on' is set the plant starts through its normal start routine including opening necessary isolation valve and dampers

If an optimiser is provided, operator adjustment of the optimiser set points. This will include the calendar and the set points to be achieved during the optimised period; and If the plant has a fixed time start/stop operator adjustment of the calendar.

Operator adjustments to the alarm set points, the routing of alarm messages, the alarm message, enable/disable the alarm block. This final function will be applicable to measured values only such as temperatures, humidity, and pressure. It will not be possible for the operator to disable alarm blocks from such items as motors or comms room equipment.

4.36 Controls Commissioning

The Automatic Controls specialist shall set to work the automatic control system as described within the project specification preliminaries and the minimum standards set out below.

The Contractor shall be responsible for the commissioning of all controls installation. It shall, however, be carried out by the Automatic Controls specialist. On completion of the installation, the Automatic control specialist shall calibrate the system to the approval of the Client Representative.

The Automatic Controls specialist will allow for all costs in connection with the setting to work and commissioning of the complete control system. Commissioning will include trial operation of all moving parts, easing, fine adjustments, lubrication and the like carried out by the controls specialist to ensure that the works are in proper working order. The Automatic Controls specialist shall formulate and issue the test method statements indicating the testing to be carried out and the expected results. At the completion of any test, the Automatic Controls specialist shall issue the result sheets, signed and annotated with relevant comments.

The commissioning will also include the offsite testing of all software, starter and control panels, dynamic graphics, integration with third parties, energy report generation.

The Automatic Controls specialist will include in his bid for all labour, special instruments, materials, tools, plant and equipment required to carry out the pre-commissioning and the performance testing of the control systems, all in accordance with the relevant CIBSE Commissioning Codes and this specification.

The Automatic Controls specialist will demonstrate to the complete satisfaction of the Client Representative that the installation or any portion thereof, which has been set to work, complies with the requirements of the specification.

Any defects of workmanship, materials, performance, maladjustment's, non-compliance with this specification, or other irregularities which become apparent during the tests will be rectified by the BMS specialist, at no additional cost to the contract, and the cost of the original test together with any repeat tests will be at the BMS specialist expense until the whole is proved free from defects and in complete working order to the complete satisfaction of the Client Representative. All systems will be left sound and correct.

After the above-mentioned conditions have been met in full and the system is fully operational, it shall be guaranteed for the defects liability period stated herein. Following each sectional completion of the works, the controls manufacturer shall allow for a minimum of four additional separate visits to site to check on continued satisfactory control performance.

4.36.1 Point to Graphic

The automatic control specialist shall check all field to graphic points and demonstrate 100% to the clients representative.

Commissioning Requirements
The testing and commissioning shall be as described elsewhere in the specification and conform with the following requirements:-
The Contractor's responsibility for commissioning shall extend over the duration of the contract and defects liability period.

An outline of the tests required is given below, but, in any case, testing of the system must comply with relevant sections of BS ISO/IEC 6592:2000 Guideline for the documentation of computer based application systems.

The Automatic Controls specialist shall be responsible for inspecting and checking the complete electrical works associated with the automatic control installation by him or installed by others to his detailed requirements. The inspections shall include a check of power and control wiring; fuses, setting of timers or time clock controls; setting of transformer output voltages; fitting flexible electrical connections and provisions of earthing, bonding and screening as necessary.

The Automatic Controls specialist shall advise the Client Representative of any site tests and give seven days' notice in writing of final tests so that they shall be carried out in the presence of the Client Representative or his representative.

The Automatic Controls specialist shall provide services of skilled commissioning engineers, certified test equipment, tools and instruments for any tests and make good any defects.

The Automatic Controls specialist shall test, calibrate, adjust, check and reset thermostatic and automatic controls and shall provide all test certificates and calibration charts.
The Automatic Controls specialist shall test all electrical equipment associated with the automatic controls installation and provide test certificates.

The Automatic Controls specialist shall check the operation of all alarms, safety devices and plant interlocking by simulating fault conditions.

During the defects, liability period the Automatic Controls specialist shall make several visits to the site and shall carry out thorough checks for continued satisfactory controls operation.

Such adjustments that are necessary to the controls installation under actual working conditions shall be made by the Automatic Controls specialist and reported to the Client Representative and shall take due account of variation due to occupancy of the building, seasonal changes or variations in the operation of mechanical plant under control etc.

Until the final check and adjustment has been carried out, the contract shall not be considered for final acceptance and the balance of retention sums shall not be released.

4.36.2 Installation Test Report

The Automatic Controls specialist shall provide detailed trend logging of the operation of the building services plant interfaced to the Automatic Controls. The Automatic Controls specialist shall co-ordinate with others and all other necessary suppliers to ensure that the complete building services operate in a homogenous state for a minimum of seven days.

During the seven day period, the Automatic Controls specialist shall arrange for step changes to be made to the plant to demonstrate that the Automatic Controls is able to recognise the change and react accordingly.

The Automatic Controls specialist shall provide sufficient hardware/software to allow every field and virtual point to be logged simultaneously for 24 hours at 1 minute intervals.

4.36.3 Details of Tests

Tests of the equipment prior to handover shall include the following minimum requirements.
Functional operation of all sensors, actuators, detectors and transducers to ensure correct and accurate measurement and operation; in accordance with the manufacturers specification for equipment supplied, and the relevant clauses of this document

- Demonstration of calibration procedures to ensure that all sensors and detectors operate within acceptable limits and with the specified accuracy
- Restart test to ensure that temporary mains failure or card removal does not cause degradation in system operation or loss of calibration in sensors and actuators
- Failsafe and override checks to demonstrate that all facilities operate as specified
- Checks on system performance relating to the ability to call up logs, alarm reports etc., and likewise to make corrections to switching times, set points, interlocks and other facilities accessible from the keyboard, all as detailed in the Contract
- The production of 'dummy run' management reports, data analysis, exception reports and operational messages
- The production of 'dummy run' alarm messages and a demonstration of the correct routing and application of these messages to the dedicated line printers
- Deliberate introduction of faults, by agreement, shall demonstrate the system's ability of self-analysis and alarm condition reporting, as well as the self-diagnostic ability of the system.

The Automatic Controls specialist shall provide a detailed test plan prior to commencing the works. The testing shall include but not be limited to such items as:

- Optimised start
- Cooling operation loading and unloading
- Heating operation loading and unloading
- Building frost protection
- Plant frost protection
- Individual pump failures
- Individual fan faults
- Boiler fault
- ASHP fault
- Chiller fault
- WSHP fault
- Inverter faults
- Failures of the pressurisation units
- Failures of water treatment plant
- Power failures to individual MCCs
- Power failures to individual remote outstations
- Failed temperature, pressure and humidity sensors
- Disconnection of network at individual CEs
- Manual plant operation from the head end

- Issuing of emails during fault conditions
- Fire cause and effect
- Energy meter readings.

The operation of the plant and its ability to react shall be recorded by the Automatic Controls specialist, both as a hand record of the events and a full Automatic Controls log. The logs shall show system set points and the actual values achieved.

The Automatic Controls specialist shall review the test results; annotate the reports indicating the faults that occurred, the records obtained by the Automatic Controls and the system reactions. The reports shall be reviewed, BMS specialist modified, and the systems corrected where incorrect actions are noted. The testing shall continue with full recording for a minimum of seven days and until the works are fault free.

The trend logs shall show plant operation over the entire period with all field and virtual points logged at a minimum of one-minute intervals.

4.36.4 Installation Test Report

The Automatic Controls specialist shall provide detailed trend logging of the operation of the building services plant interfaced to the Automatic Controls system. The Building Services Contractors shall co-ordinate with others and all other necessary suppliers to ensure that the complete building services operate in a homogenous state for a minimum of seven days.

Each major plant item shall have trend logging records for the installation and the future environmental test reports. The BMS specialist shall set and initiate this trend logging and include such items as:

- Outside air temperature
- Time-of-day
- Set point of measured value to be achieved.
- Pump differential pressure set points
- Chilled water/heating water flow temperatures
- Supply/return air temperatures
- Actual measured value
- Valve positions
- Pump/fan running speed.

During the seven day period, the Automatic Controls specialist shall arrange for step changes to be made to the plant to demonstrate that the BMS is able to recognise the change and react accordingly.

During this 7 day test values shall be recorded at a nominal (15) minute interval however for 24 hours each system shall have very recorded at (1) minute intervals.

4.37 Environmental Report

The Building Services Contractors shall arrange for a survey in all areas, that temperatures that are being achieved after the system has been fully adjusted and ready for occupation.

The survey shall monitor room / circulation air temperature for a period of 7 days. The survey shall include

- The monitoring of plant start/stop times

- The record of all plant running
- A record of the electrical power consumed
- A record of heating and cooling energy
- Morning boost operation
- Heating primary and secondary system flow and return temperatures
- HWS temperature
- AHU start/stop times
- AHU supply and return air temperatures.

The survey shall include the demonstration of plant loading and unloading. Appropriate commissioning Contractor attendance shall be provided to manually adjust the system where necessary to simulate load variance and to validate controls calibration for flow measurement and differential pressure.

The data may be recorded by the BMS sensors, it is not necessary to provide additional devices.

4.38 Metering Review

The BMS specialist shall work in conjunction with the meters suppliers and shall check and verify 100% of each meter from the field measuring point through to the graphic display, energy billing (where appropriate) and energy dashboards displays. Where metering forms part of alarm management the BMS specialist shall demonstrate these alarm reports.

The meter specialist supplier shall be responsible confirming the operation of the meter, the BMS specialist shall be responsible for reading and transferring the data to the appropriate database.

Each meter shall be checked at twice with more than (1) week between each reading to show that the meter is incrementing, and that dashboards and system alarms are correctly generated.

4.39 Handover Procedure

The handover procedure shall be as defined in the contract terms and conditions. In addition, the contractors shall demonstrate the BMS plant operation both as a single entity and as a homogenous installation with the MEP services. The contractors, shall develop the handover procedure that will demonstrate a number of specific activities. The reports shall demonstrate that the plant and equipment has been installed and any defects closed out or agreed with the client with suitable procedure for rectification and that the plant and equipment is operating as intended. This shall include but is not limited to the following:

An installation report that identifies that the plant/equipment has been installed to the manufacturer's recommendations, is labelled and installed in a neat and workmanlike manner.
An installation report that identifies that the plant and equipment has been inspected by the main contractor and is confirmed by them as being suitable for acceptance of the client.
An inspection report that confirms that each plant item has been demonstrated as operating against the agreed operation procedure and that all safety interlocks have been tested to a satisfactory standard.

The environmental report, with comments and advice for future enhancement of the plant operation.

A testing report that confirms that each instrument and actuator has been demonstrated as being calibrated and reporting correct information to the BMS display panel.

The report shall confirm that local operators have been trained in what to expect for the plant operation, how and where the safety interlocks are provided and what user information and adjustments can be made.

The building log book should be provided.

The operating and maintenance manuals should be provided. Where necessary the base build manuals shall be modified to reflect the new works.

4.40 Electrical Services Testing and Commissioning

Upon completion of the works, the whole installation shall be inspected and tested by the BMS specialist in accordance with Part 6 and appendix 6 of the IET Wiring Regulations and shall submit the completion and test certificate forms for approval by the consulting engineer.

4.41 IET Wiring Regulations and British Standards

Full compliance is required with the current edition of BS7671 and all relevant British Standards Codes of Practice including all amendments that are current at the date of tender.
Full compliance will be required with the latest appropriate British Standards Specifications issued in respect of all materials used on the project.

Automatic Controls
Points drawings

This drawing shall be read in conjunction with all other drawings and the services specification document(s).
All materials and workmanship shall conform with the relevant British & European Standards, Specifications and Codes of Practice.

Rev	Date	Description	By

PRINT IN COLOUR | GENERAL NOTES | Amendments

Client
Fairlawn Controls

Status
STAGE 4

Project
Fairlawn

Drawing Title
AUTOMATIC CONTROLS

x

www.fairlawncontrols.com alan@fairlawncontrols.com

Drawn	Engineer	Checked	Date origin
	Alan J		

Scale @A3	File/BIM ref	Project
NTS		

Sheet number	Revision
1	P-02

MOTORISED DAMPER

MOTORISED DAMPER WITH END SWITCH

MOTORISED SMOKE RATED DAMPER WITH END SWITCH

WEATHER LOUVRE

ELECTRIC HEATER BATTERY

FILTER

AIR TO AIR RECUPORATOR

MECHANICAL NON RETURN DAMPER

FIXED SPEED PUMP

VARIABLE SPEED PUMP

VARIABLE SPEED FAN

TWO SPEED FAN

FIXED SPEED FAN

HEAT RECOVERY FAN UNIT

POSITIVE DISPLACEMENT PUMP

PRESSURISATION UNIT

AIR COOLED CHILLER

WATER SOURCE HEAT PUMP

FORCED DRAUGHT BURNER

COOLING TOWER

DIRECT GAS FIRED AIR HEATER

PUMP WITH INBUILT INVERTER

4 PORT CONTROL VALVE

3 PORT CONTROL VALVE

2 PORT CONTROL VALVE

CONSUMER

DX COOLING UNIT

CALORIFIER

TWIN FAN PACKAGED UNIT

HUMIDIFIER ELECTRIC

HUMIDIFIER SPRAY

ELECTRIC METER

HEAT METER

WATER METER

GAS METER

HOT WATER COIL

COOLING COIL

RUN-AROUND COIL

FLOW METER

HEAT EXCHANGER

ADIABATIC COOLER

ORIFICE PLATE

FIRE DAMPER

VOLUME CONTROL DAMPER

HEAT METER

THERMAL WHEEL

CONSTANT VOLUME UNIT (with integral controller, velocity sensor and actuator)

VARIABLE VOLUME UNIT (with integral controller, velocity sensor and damper actuator)

PACKAGED HOT WATER GENERATOR WITH ELECTRIC HEATER

DRY AIR COOLER

PUSH BUTTON

ALM - EQUIPMENT MONITORING POINT
BRT - BOILER RESET TEMPERATURE
BFR- BOILER FIRING RATE
CBO - COMMAND BOILER ON /OFF
CCO - COMMAND CONTACTOR ON /OFF
CCR - RUN STATUS OF CHILLER
CDM - COMMAND DAMPER MODULATING
CDO - COMMAND DAMPER TWO POSITION
CEO - COMMAND EQUIPMENT ON/OFF
CFO - COMMAND FAN ON/OFF (HS- HIGH SPEED, LS-LOW SPEED)
CFIO - COMMAND FAN INVERTER ON /OFF
CHM - COMMAND HEATER MODULATION
CHUM - COMMAND HUMIDIFIER MODULATION
CHO - COMMAND HEATER ON /OFF
CHUO - COMMAND HUMIDIFIER ON /OFF
CIO - COMMAND INVERTER ON/OFF
CP - CONTROL PANEL
CPO - COMMAND PUMP ON / OFF
CPIO - COMMAND PUMP INVERTER ON / OFF
CVM - CONTROL VALVE MODULATION
CVO - CONTROL VALVE OPEN/CLOSE
DA - DRIVE AVAILABLE
DXCLG - DX COOLING STAGE
EHM - ELECTRIC HEATER MODULATION
EHO - ELECTRIC HEATER ON/OFF
ES - END SWITCH STATUS (D-DAMPER, V-VALVE)
FIR - FIRE ALARM
FIE - FIREMAN'S EXTRACT SWITCH
FIFS - FAN INVERTER FAULT STATUS
FIRS - FAN INVERTER RUN STATUS
FLS - GENERAL FLOW STATUS

FLT - GENERAL FAULT STATUS
FPS - FILTER PRESSURE SWITCH
FSC - INVERTED FAN SPEED CONTROL
FSM - FAN SPEED MODULATION
FRS - FAN RUN STATUS - (HS - HIGH SPEED, LS - LOW SPEED)
HPCO - HIGH PRESSURE CUT OUT
HUM - HUMIDIFIER MODULATION
HUF - HUMIDIFIER FAULT
IRS - INVERTER RUN STATUS
LPCO - LOW PRESSURE CUTOUT
LTCO - LOW TEMPERATURE CUTOUT
PIFS - PUMP INVERTER FAULT STATUS
PRS - PUMP RUN STATUS
PSM - PUMP SPEED MODULATION
PWR - MOTOR POWER KWHR
SAFETY - HARDWIRED SAFETY INTERLOCKS
STS - GENERAL PLANT STATUS
SWT - SWITCH STATUS
SW - SOFTWARE INTERFACE
TWSM - THERMAL WHEEL SPEED MODULATION
TI - FIELD POINT WIRED TO INVERTER TERMINALS
TIX - IMMERSION TEMPERATURE SENSOR
TH - THERMISTOR SENSOR WIRING
TRS - TEMPERATURE ADJUSTMENT
TWX - SPACE TEMPERATURE SENSOR
TZ - FROST STAT TRIP
VOL - VOLUMETRIC FLOW RATE
VRST - VOLUMETRIC FLOW RATE RESET

AQ CO2 - AIR QUALITY SENSOR
AQ CO - AIR QUALITY SENSOR CARBON MONOXIDE
DPS - DIFFERENTIAL PRESSURE SWITCH
HTCO - HIGH TEMPERATURE CUT OUT
PDX - PRESSURE DIFFERENTIAL SENSOR
SPEED - MANUAL SPEED ADJUSTOR
TAX - TEMPERATURE SENSOR IN DUCT
TIX - TEMPERATURE SENSOR WATER
TFX - TEMPERATURE SENSOR FLOOR
TWX - TEMPERATURE SENSOR WITH USER ADJUSTABLE KNOB
TWX - TEMPERATURE SENSOR ON WALL
V FI - VOLUMETRIC FLOW METER MOUNTED IN FAN INLET
RH - RELATIVE HUMIDITY SENSOR
RH2 - HUMIDITY STAT
ULV - ULTRASONIC LEVEL VOLUME
V - VOLUMETRIC FLOW METER

TZ - FROST STAT
LS - LEVEL SWITCH
SD - SMOKE DETECTOR
PIR - PASSIVE INFRARED SENSOR
SPX - STATIC PRESSURE SENSOR
SPS - STATIC PRESSURE SWITCH
HPCO - HIGH PRESSURE CUT OUT
LPCO - LOW PRESSURE CUT OUT
TIS - IMMERSION THERMOSTAT
LS L - LEVEL SWITCH LOW
LS H - LEVEL SWITCH HIGH
MQS Z - MOISTURE STAT
REF LK - REFRIGERANT LEAK DETECTION SENSOR
PM 2.5 - AIR PARTICULATE PM 2.5 SENSOR
VOC - VOC SENSOR

1. ON LOAD LOCKABLE ISOLATOR
2. MCB TYPE C OR D RATED IN ACCORDANCE WITH DRIVE AND STARTING METHOD
3. FUSE PROTECTION
4. 3-PHASE HEALTHY LAMPS
5. MID APPROVED - KILOWATT HOUR METER WITH INSTANTANEOUS AND ACCUMULATIVE READ OUT. AMPS AND VOLTS PER PHASE USING SOFT KEYS. (M-BUS/MODBUS/BACNET OUTPUT)
6. NON DOOR INTERLOCKED ISOLATOR
7. STAR DELTA STARTER WITH HAND RESET THERMAL OVERLOADS
8. INVERTER DRIVE
9. CONTACTOR
10. EC MOTOR DRIVE
11. MOTOR PHASE ANGLE SHIFT RELAY
12. CONTACTOR RESET
13. DISTRIBUTION BOARD WITH MCBS FOR REMOTE PACKAGED EQUIPMENT
14. RELAY SECTION
15. TERMINAL SECTION FOR DRIVES
16. KWHR METER
17. CONTROLS TRANSFORMER
18. PUMP (FAN) 1/ PUMP (FAN) 2 SELECTOR SWITCH
19. HAND/OFF/AUTO SWITCH - (SYSTEM)
20. HAND/OFF/AUTO SWITCH - (INDIVIDUAL DRIVE)
21. OFF/AUTO SWITCH
22. RUN LAMP 'GREEN' (DRIVEN FROM BMS)
23. TRIP LAMP 'AMBER'
24. SYSTEM RUNNING LAMP 'GREEN'
25. HTCO LAMP
26. CHILLER HAND/OFF/AUTO SWITCH
27. PRESSURISATION UNIT FAULT LAMP 'AMBER'
28. RUN LAMP 'GREEN' derived from DPS OR inverter run signal
29. TRIP LAMP 'AMBER' derived from packaged plant starter
30. THYRISTOR
31. HUMIDIFIER OFF/AUTO SWITCH
32. FAULT
33. GAS VALVE 'CLOSED' LAMP (AMBER)
34. GAS VALVE 'RESET' PUSH BUTTON
35. BOILER FIRING
40. AUTOMATIC POWER TRANSFER SWITCH WITH MANUAL BYPASS
41. MAINS 1 AVAILABLE LAMP 'WHITE'
42. MAINS 2 AVAILABLE 'WHITE'
43. MAINS 1 SELECTED 'WHITE'
44. MAINS 2 SELECTED ' WHITE'
45. CONTROL CIRCUIT HEALTHY 'WHITE'
46. FIRE ACTIVE 'AMBER'
47. BMS (PLC) OUTSTATION
48. BMS (PLC) KEY/DISPLAY PANEL ON PANEL FASCIA
49. ALARM RESET BUTTON
50. LOW PRESSURE
51. SYSTEM COMMON ALARM LAMP 'AMBER'
52. GAS UPS
53. BMS (PLC) UPS
54. CONDENSER UNIT OFF/AUTO SWITCH
55. ANTI CONDENSATION HEATER AND THERMOSTAT
56. PUSH TO START BUTTON
57. PUSH TO STOP BUTTON
58. LAMP GROUP TEST BUTTON
59. INTERNAL PANEL LAMP
60. TANKA/TANKB/COMMON SELECTOR SWITCH
61. HARDWIRED TIMER TO HOLD GAS SYSTEM HEALTHY
62. AUTO/LOW SPEED/HIGH SPEED SWITCH WITH HARDWIRED TIMER FOR HIGH TO LOW SPEED
63. CO HIGH LEVEL INDICATION
64. FIREMANS OVERRIDE KEY SWITCH - AUTO/OFF/HIGH SPEED
65. MAINTENANCE SWITCH ON/OFF
66. FIRE ALARM TEST SWITCH
67. SOFT START
68. METER GATEWAY - MODBUS/M-BUS TO BACNET
69. KEYPAD/DISPLAY PANEL ALLOWING ACCESS AS A BROWSER TO THE LOCAL PANEL BMS
70. KEYPAD/DISPLAY PANEL ALLOWING SITE WIDE ACCESS AS A BROWSER TO THE COMPLETE BMS
71. LAYER 2 MANAGED SWITCH
72. RJ 45 FOR COMMISSIONING PORT
73. CLASS 2 SURGE ARRESTOR
74. CONDENSATE PUMP

LOCKABLE ON LOAD ISOLATOR

KEY RELEASE LOCK STOP BUTTON

TWIST TO RELEASE LOCK STOP BUTTON

INVERTER WITH ISOLATOR

PSACO - PACKAGED STARTER PANEL WITH INTEGRAL AUTOCHANGE OVER

PSMP - PACKAGED STARTER PANEL WITH INTEGRAL MOTOR PROTECTION

This drawing shall be read in conjunction with all other drawings and the services specification document(s).
All materials and workmanship shall conform with the relevant British & European Standards, Specifications and Codes of Practice.

PRINT IN COLOUR | GENERAL NOTES

Rev	Date	Description	By

Amendments

Client: Fairlawn Controls

Status: STAGE 4

Project: Fairlawn

Drawing Title: AUTOMATIC CONTROLS

LEGEND

www.fairlawncontrols.com alan@fairlawncontrols.com

Drawn	Engineer	Checked	Date origin
	Alan J		

Scale @A3: NTS | File/BIM ref | Project

Sheet number: 0010 | Revision: P-02

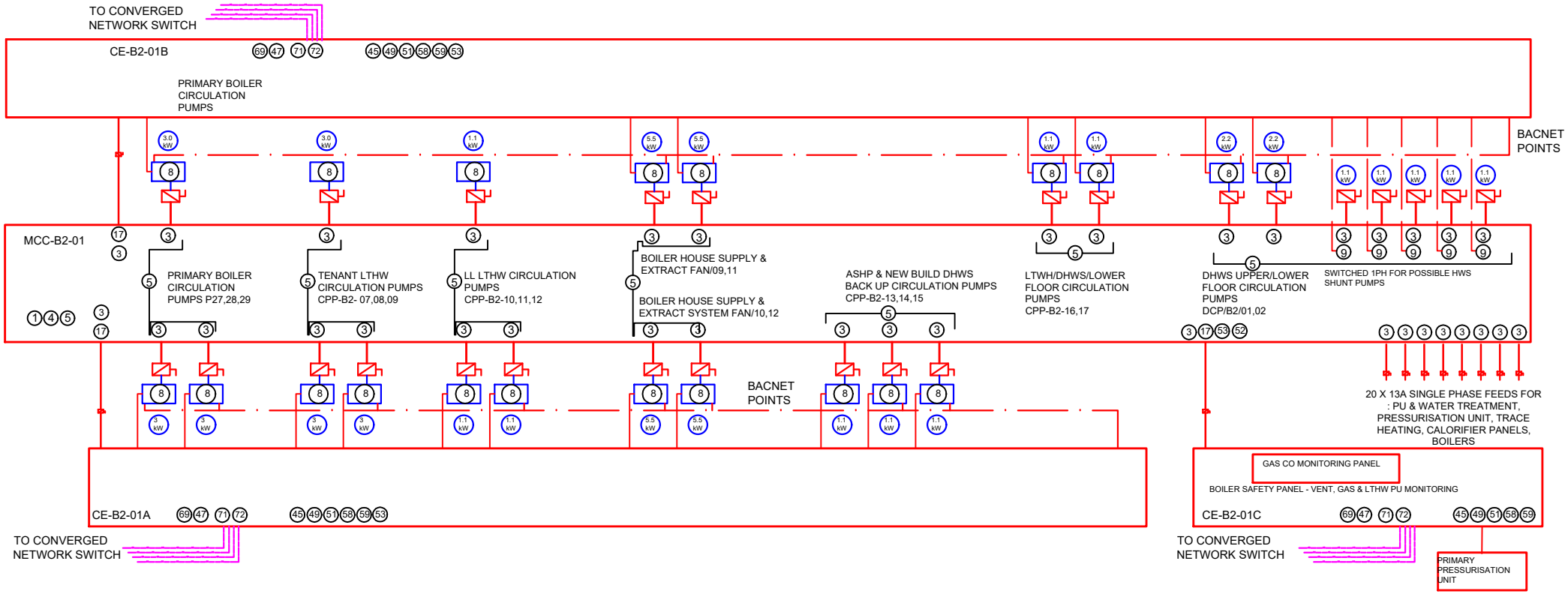

This drawing shall be read in conjunction with all other drawings and the services specification document(s).
All materials and workmanship shall conform with the relevant British & European Standards, Specifications and Codes of Practice.

Rev	Date	Description	By

PRINT IN COLOUR | GENERAL NOTES | Amendments

Client: Fairlawn Controls

Status: STAGE 4

Project: Fairlawn

Drawing Title: AUTOMATIC CONTROLS

PANEL 01

www.fairlawncontrols.com alan@fairlawncontrols.com

Drawn | Engineer: Alan J | Checked | Date origin

Scale @A3: NTS | File/BIM ref | Project

Sheet number | Revision: 0510 P-02

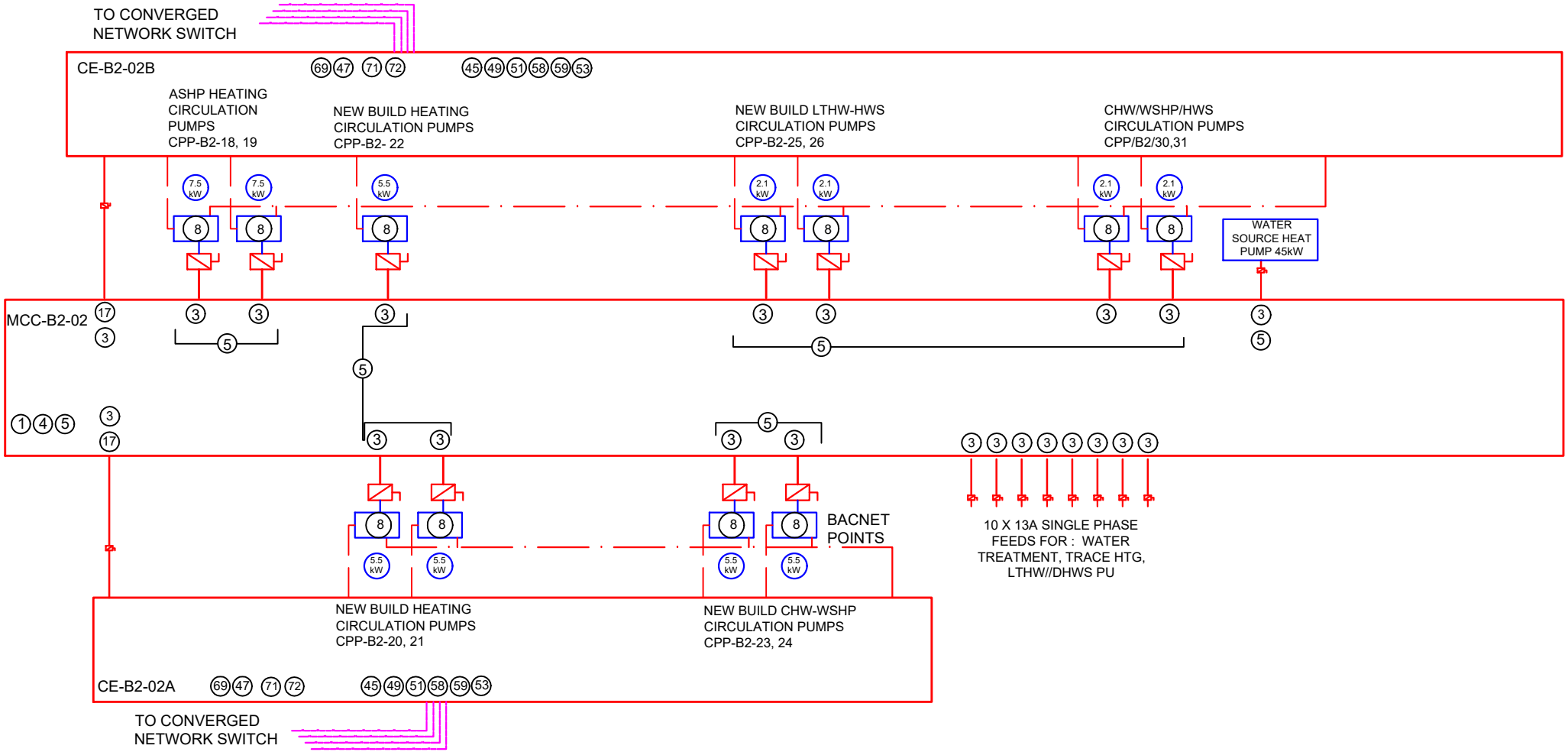

This drawing shall be read in conjunction with all other drawings and the services specification document(s).
All materials and workmanship shall conform with the relevant British & European Standards, Specifications and Codes of Practice.

Rev	Date	Description	By

PRINT IN COLOUR | GENERAL NOTES | Amendments

Client: Fairlawn Controls

Status: STAGE 4

Project: Fairlawn

Drawing Title: AUTOMATIC CONTROLS

PANELS 2

www.fairlawncontrols.com alan@fairlawncontrols.com

Drawn	Engineer	Checked	Date origin
	Alan J		

Scale @A3: NTS | File/BIM ref | Project

Sheet number: 0520 | Revision: P-02

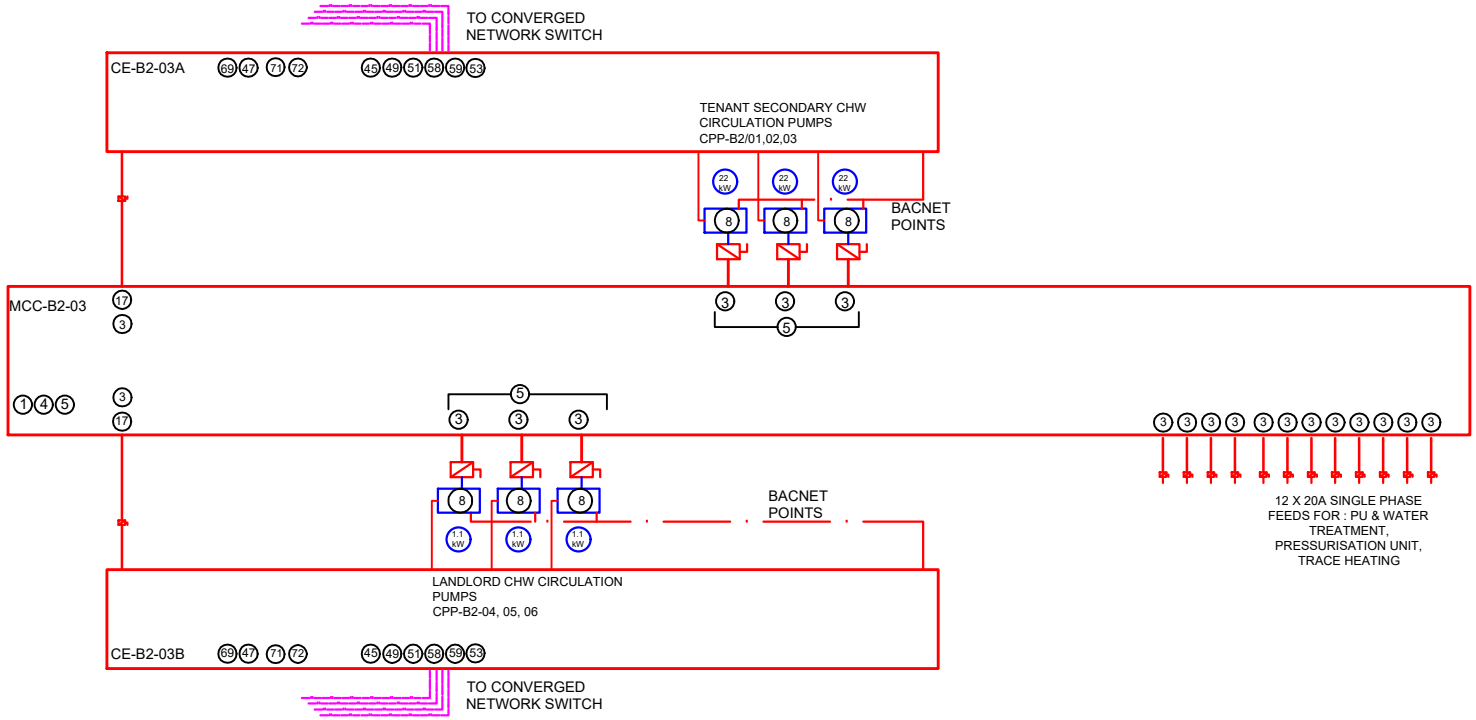

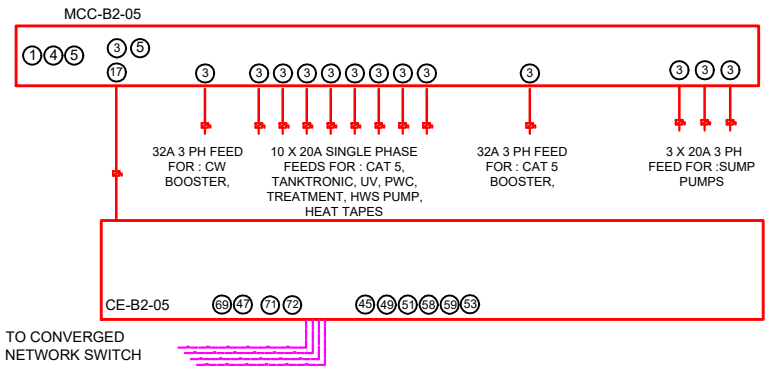

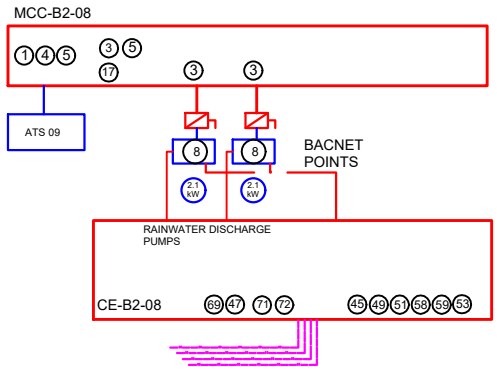

This drawing shall be read in conjunction with all other drawings and the services specification document(s).
All materials and workmanship shall conform with the relevant British & European Standards, Specifications and Codes of Practice.

Rev	Date	Description	By

PRINT IN COLOUR | GENERAL NOTES | Amendments

Client: Fairlawn Controls

Status: STAGE 4

Project: Fairlawn

Drawing Title: AUTOMATIC CONTROLS

PANELS 3

www.fairlawncontrols.com alan@fairlawncontrols.com

Drawn	Engineer	Checked	Date origin
	Alan J		

Scale @A3: NTS | File/BIM ref | Project

Sheet number | Revision: 0530 P-02

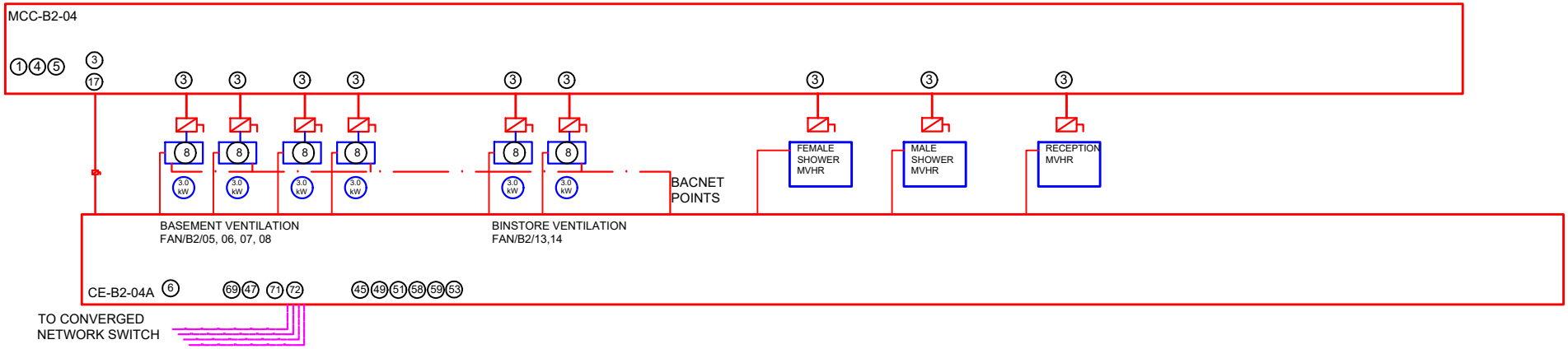

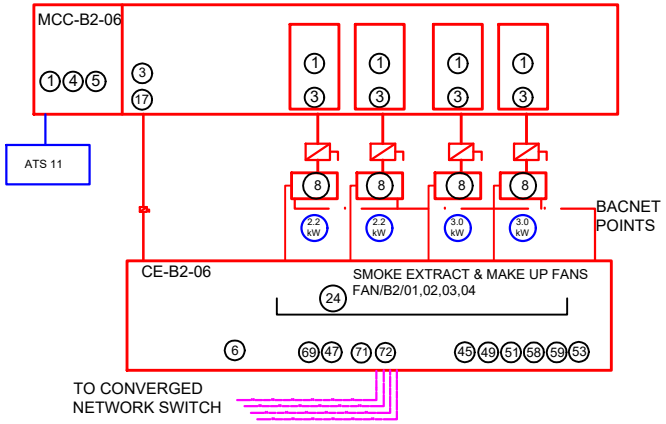

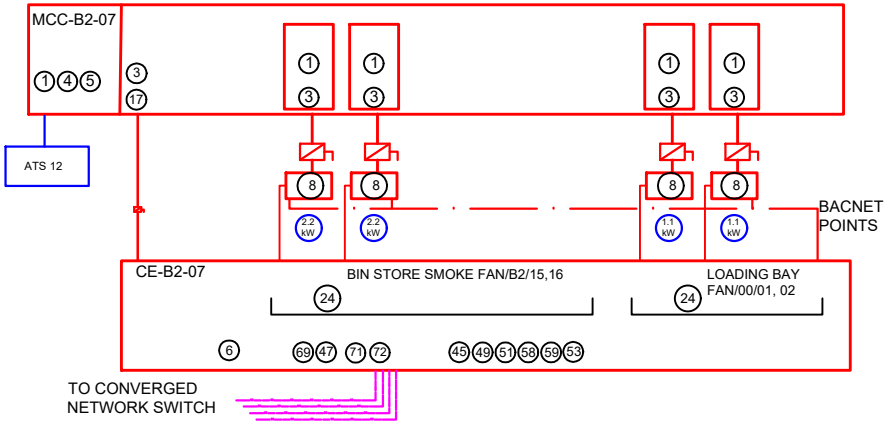

This drawing shall be read in conjunction with all other drawings and the services specification document(s).
All materials and workmanship shall conform with the relevant British & European Standards, Specifications and Codes of Practice.

Rev	Date	Description	By

PRINT IN COLOUR | GENERAL NOTES | Amendments

Client
Fairlawn Controls

Status
STAGE 4

Project
Fairlawn

Drawing Title
AUTOMATIC CONTROLS

PANELS 4

www.fairlawncontrols.com alan@fairlawncontrols.com

Drawn	Engineer	Checked	Date origin
	Alan J		

Scale @A3 NTS | File/BIM ref | Project

Sheet number | Revision
0540 P-02

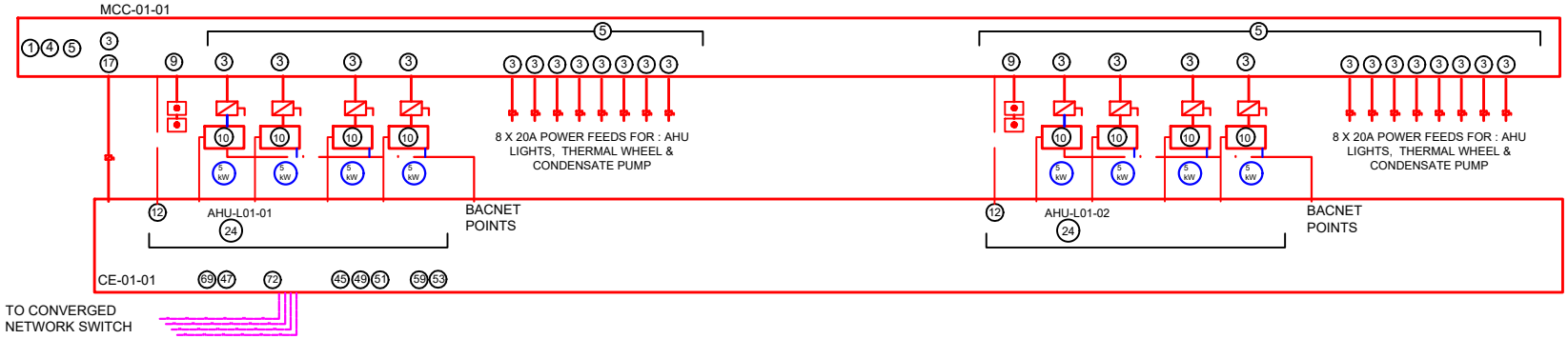

This drawing shall be read in conjunction with all other drawings and the services specification document(s).
All materials and workmanship shall conform with the relevant British & European Standards, Specifications and Codes of Practice.

Rev	Date	Description	By

PRINT IN COLOUR | GENERAL NOTES | Amendments

Client: Fairlawn Controls

Status: STAGE 4

Project: Fairlawn

Drawing Title: AUTOMATIC CONTROLS

PANELS 5

www.fairlawncontrols.com alan@fairlawncontrols.com

Drawn | Engineer: Alan J | Checked | Date origin

Scale @A3: NTS | File/BIM ref | Project

Sheet number: 0550 | Revision: P-02

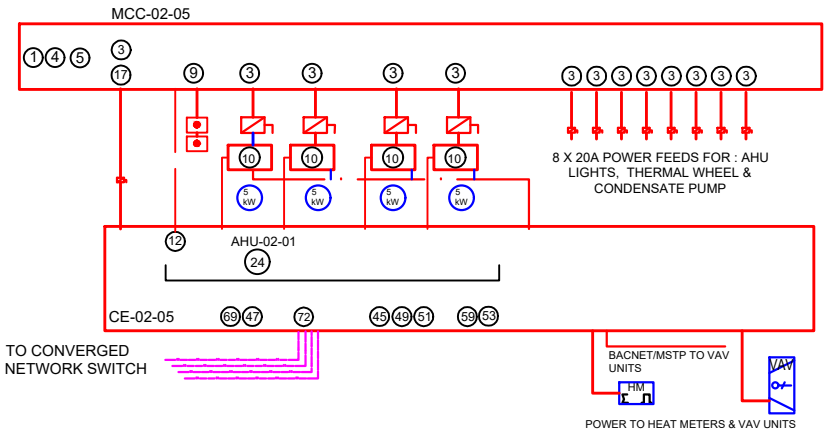

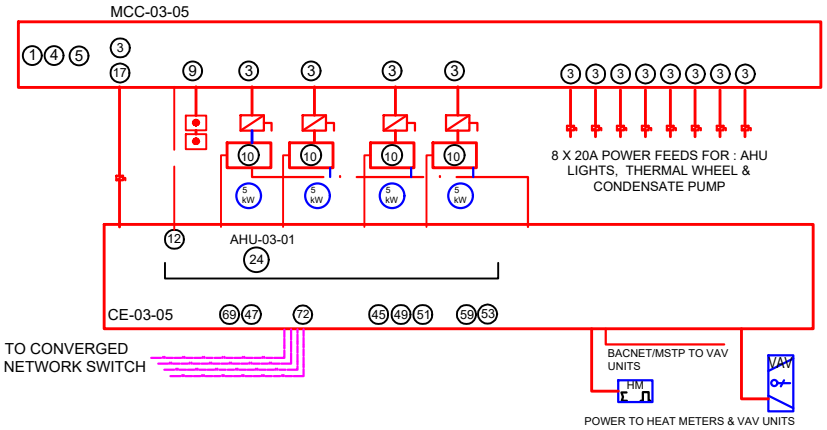

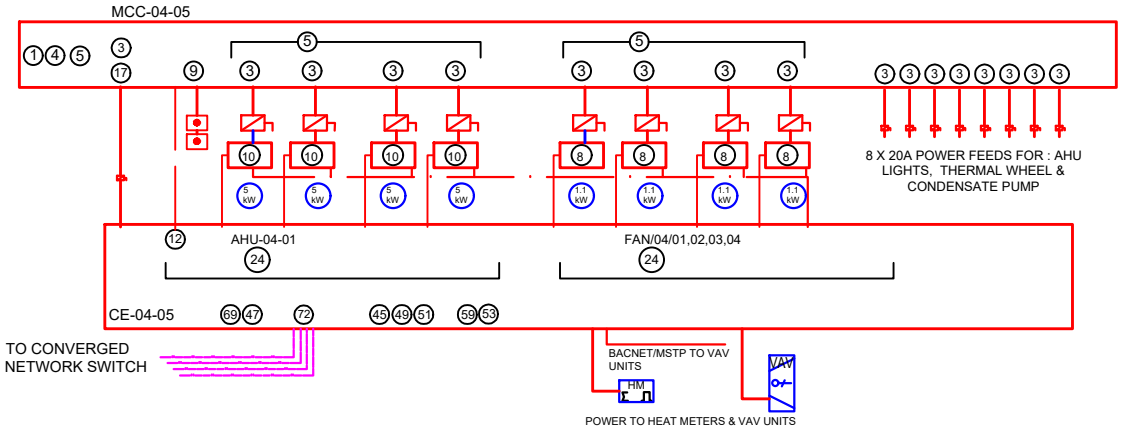

This drawing shall be read in conjunction with all other drawings and the services specification document(s).
All materials and workmanship shall conform with the relevant British & European Standards, Specifications and Codes of Practice.

Rev	Date	Description	By

PRINT IN COLOUR | GENERAL NOTES | Amendments

Client: Fairlawn Controls

Status: STAGE 4

Project: Fairlawn

Drawing Title: AUTOMATIC CONTROLS

PANELS 6

www.fairlawncontrols.com alan@fairlawncontrols.com

Drawn | Engineer: Alan J | Checked | Date origin

Scale @A3: NTS | File/BIM ref | Project

Sheet number: 0560 | Revision: P-02

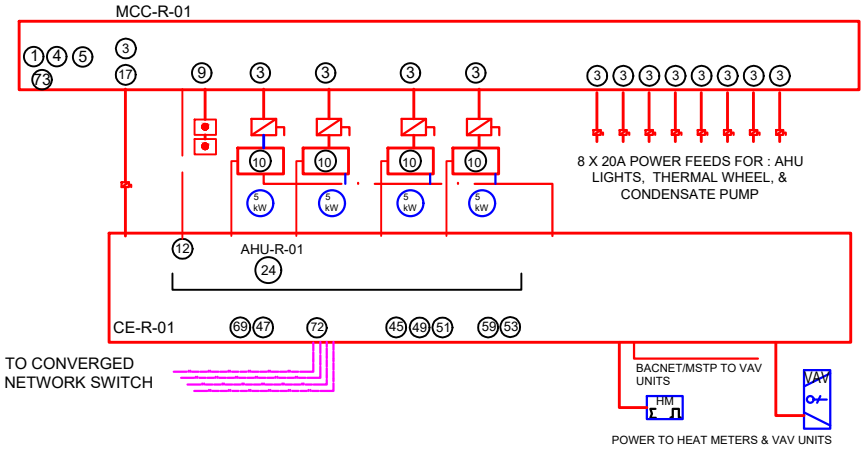

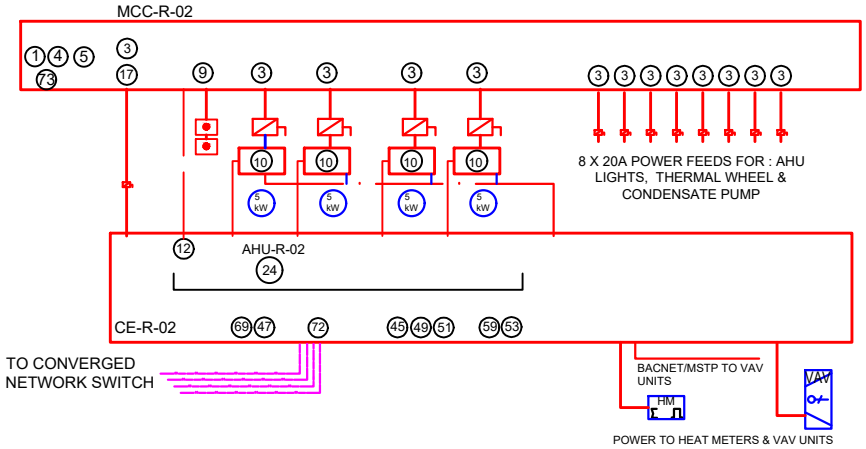

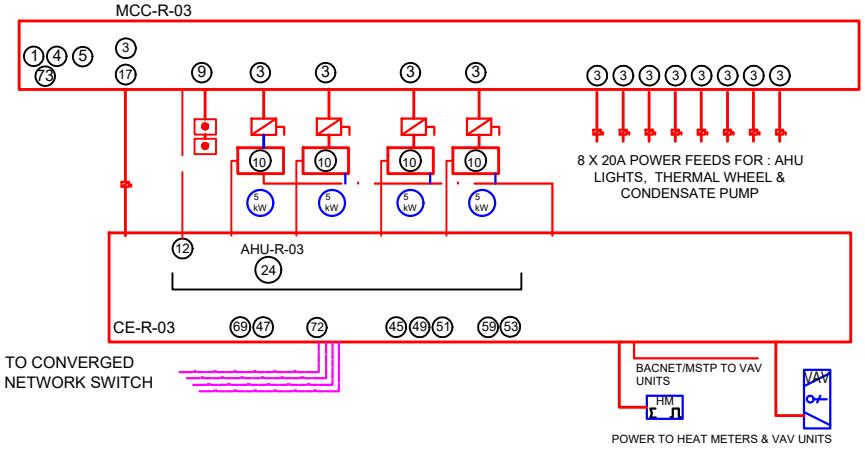

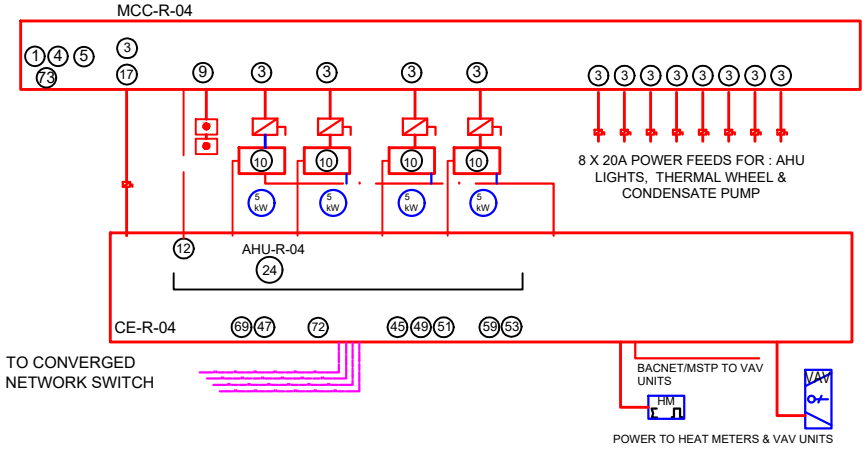

This drawing shall be read in conjunction with all other drawings and the services specification document(s).
All materials and workmanship shall conform with the relevant British & European Standards, Specifications and Codes of Practice.

Rev	Date	Description	By

PRINT IN COLOUR | GENERAL NOTES | Amendments

Client: Fairlawn Controls

Status: STAGE 4

Project: Fairlawn

Drawing Title: AUTOMATIC CONTROLS

PANELS 7

www.fairlawncontrols.com alan@fairlawncontrols.com

Drawn	Engineer	Checked	Date origin
	Alan J		

Scale @A3: NTS | File/BIM ref | Project

Sheet number: 0570 | Revision: P-02

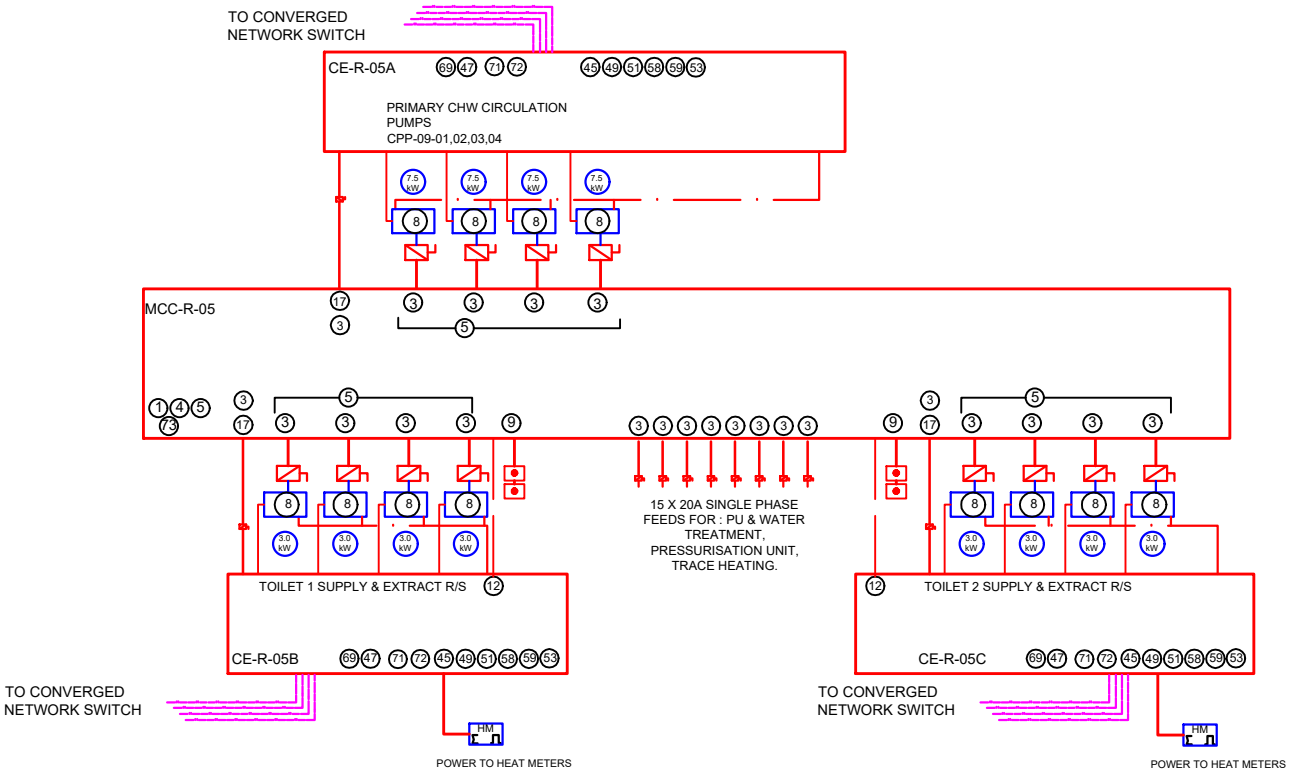

This drawing shall be read in conjunction with all other drawings and the services specification document(s).
All materials and workmanship shall conform with the relevant British & European Standards, Specifications and Codes of Practice.

Rev	Date	Description	By

PRINT IN COLOUR | GENERAL NOTES | Amendments

Client: Fairlawn Controls

Status: STAGE 4

Project: Fairlawn

Drawing Title: AUTOMATIC CONTROLS

PANELS 8

www.fairlawncontrols.com alan@fairlawncontrols.com

Drawn | Engineer: Alan J | Checked | Date origin

Scale @A3: NTS | File/BIM ref | Project

Sheet number: 0580 | Revision: P-02

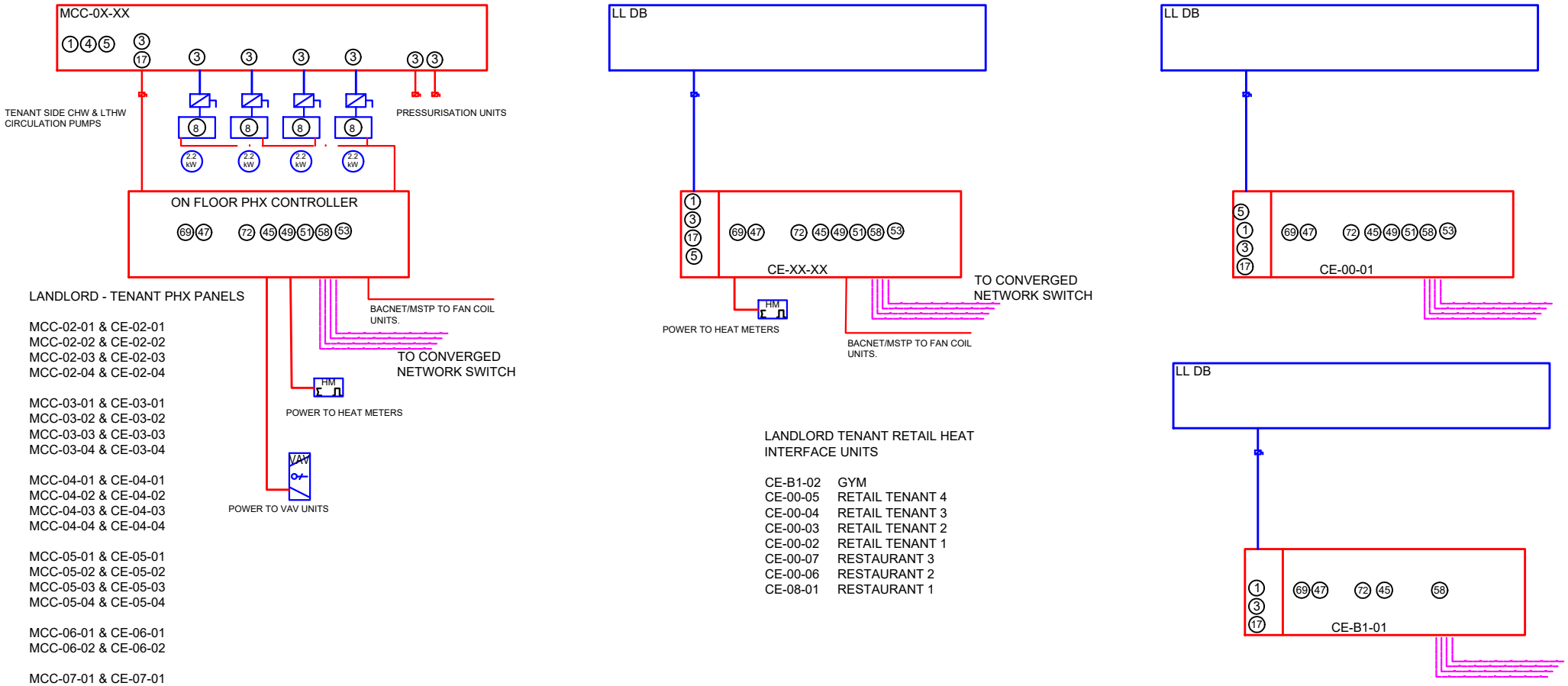

LANDLORD - TENANT PHX PANELS

MCC-02-01 & CE-02-01
MCC-02-02 & CE-02-02
MCC-02-03 & CE-02-03
MCC-02-04 & CE-02-04

MCC-03-01 & CE-03-01
MCC-03-02 & CE-03-02
MCC-03-03 & CE-03-03
MCC-03-04 & CE-03-04

MCC-04-01 & CE-04-01
MCC-04-02 & CE-04-02
MCC-04-03 & CE-04-03
MCC-04-04 & CE-04-04

MCC-05-01 & CE-05-01
MCC-05-02 & CE-05-02
MCC-05-03 & CE-05-03
MCC-05-04 & CE-05-04

MCC-06-01 & CE-06-01
MCC-06-02 & CE-06-02

MCC-07-01 & CE-07-01
MCC-07-02 & CE-07-02

LANDLORD TENANT RETAIL HEAT INTERFACE UNITS

CE-B1-02	GYM
CE-00-05	RETAIL TENANT 4
CE-00-04	RETAIL TENANT 3
CE-00-03	RETAIL TENANT 2
CE-00-02	RETAIL TENANT 1
CE-00-07	RESTAURANT 3
CE-00-06	RESTAURANT 2
CE-08-01	RESTAURANT 1

This drawing shall be read in conjunction with all other drawings and the services specification document(s).
All materials and workmanship shall conform with the relevant British & European Standards, Specifications and Codes of Practice.

Rev	Date	Description	By

PRINT IN COLOUR | GENERAL NOTES | Amendments

Client: Fairlawn Controls

Status: STAGE 4

Project: Fairlawn

Drawing Title: AUTOMATIC CONTROLS

PANELS 9

www.fairlawncontrols.com alan@fairlawncontrols.com

Drawn | Engineer: Alan J | Checked | Date origin

Scale @A3: NTS | File/BIM ref | Project

Sheet number | Revision: 0590 P-02

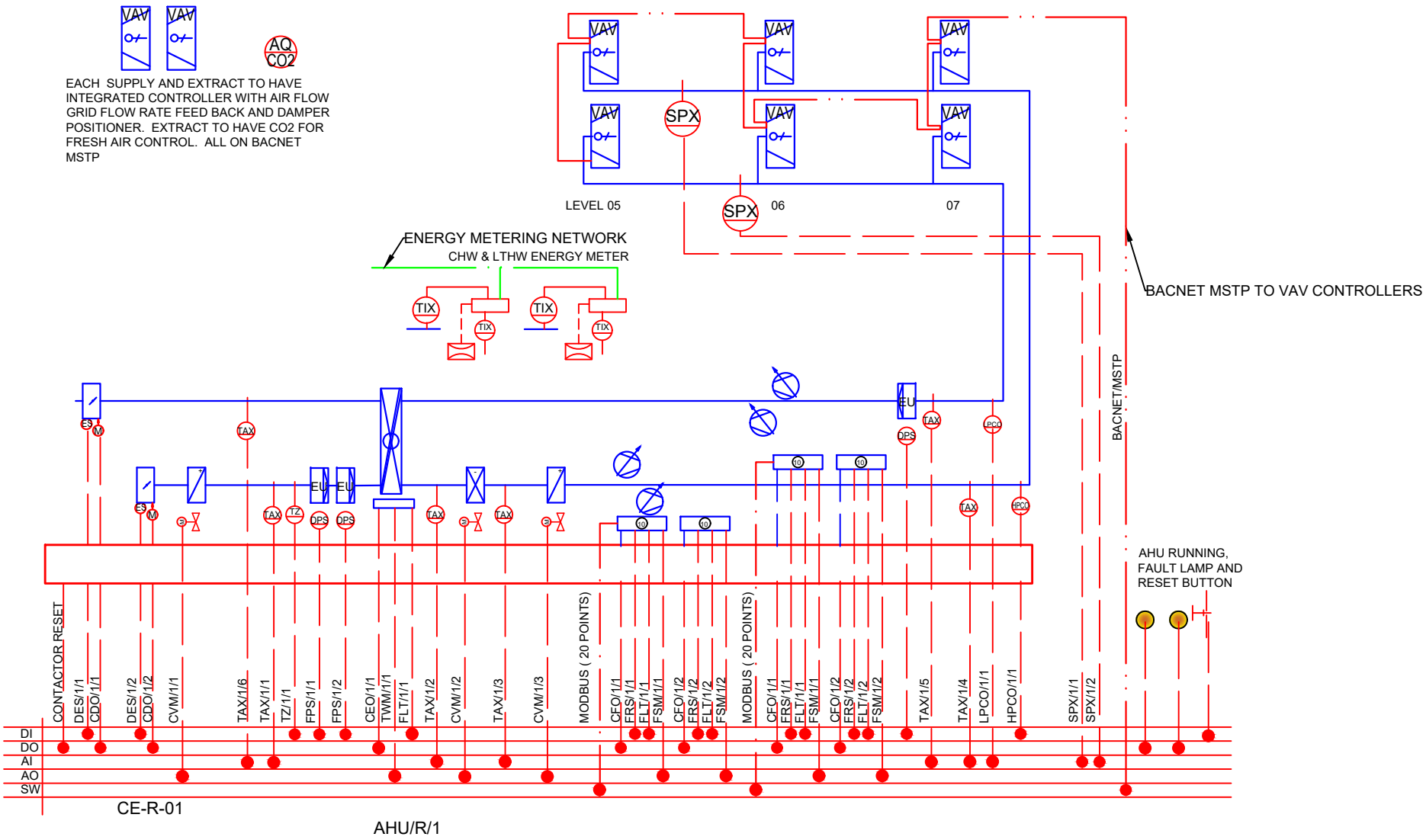

This drawing shall be read in conjunction with all other drawings and the services specification document(s).
All materials and workmanship shall conform with the relevant British & European Standards, Specifications and Codes of Practice.

Rev	Date	Description	By

PRINT IN COLOUR | GENERAL NOTES | Amendments

Client: Fairlawn Controls

Project: Fairlawn

Status: STAGE 4

Drawing Title: AUTOMATIC CONTROLS

VENTILATION 1

www.fairlawncontrols.com alan@fairlawncontrols.com

Drawn	Engineer	Checked	Date origin
	Alan J		

Scale @A3: NTS | File/BIM ref | Project

Sheet number: 1010 | Revision: P-02

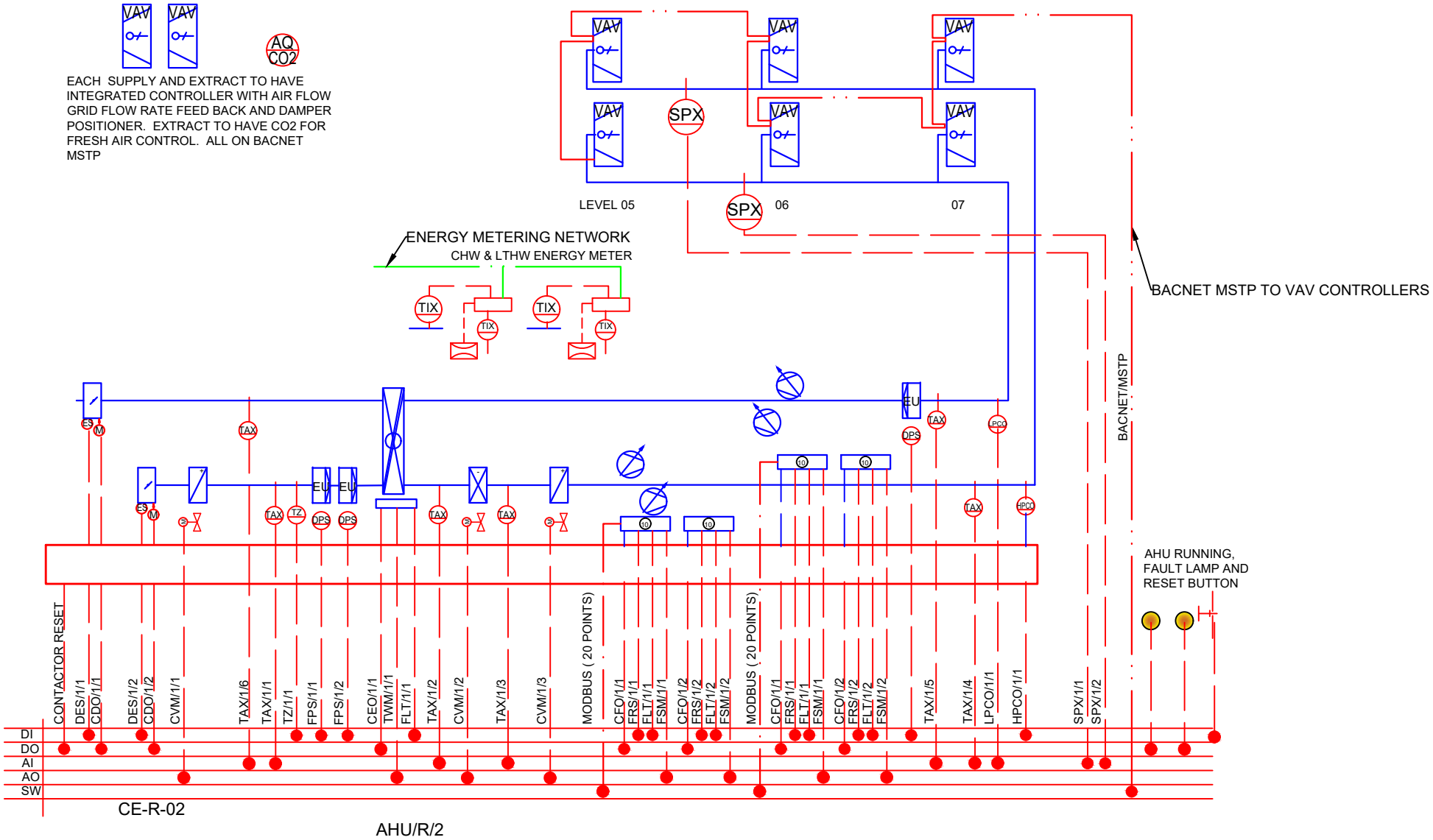

This drawing shall be read in conjunction with all other drawings and the services specification document(s).
All materials and workmanship shall conform with the relevant British & European Standards, Specifications and Codes of Practice.

Rev	Date	Description	By

PRINT IN COLOUR | GENERAL NOTES | Amendments

Client: Fairlawn Controls

Status: STAGE 4

Project: Fairlawn

Drawing Title: AUTOMATIC CONTROLS

VENTILATION 2

www.fairlawncontrols.com alan@fairlawncontrols.com

Drawn | Engineer: Alan J | Checked | Date origin

Scale @A3: NTS | File/BIM ref | Project

Sheet number: 1020 | Revision: P-02

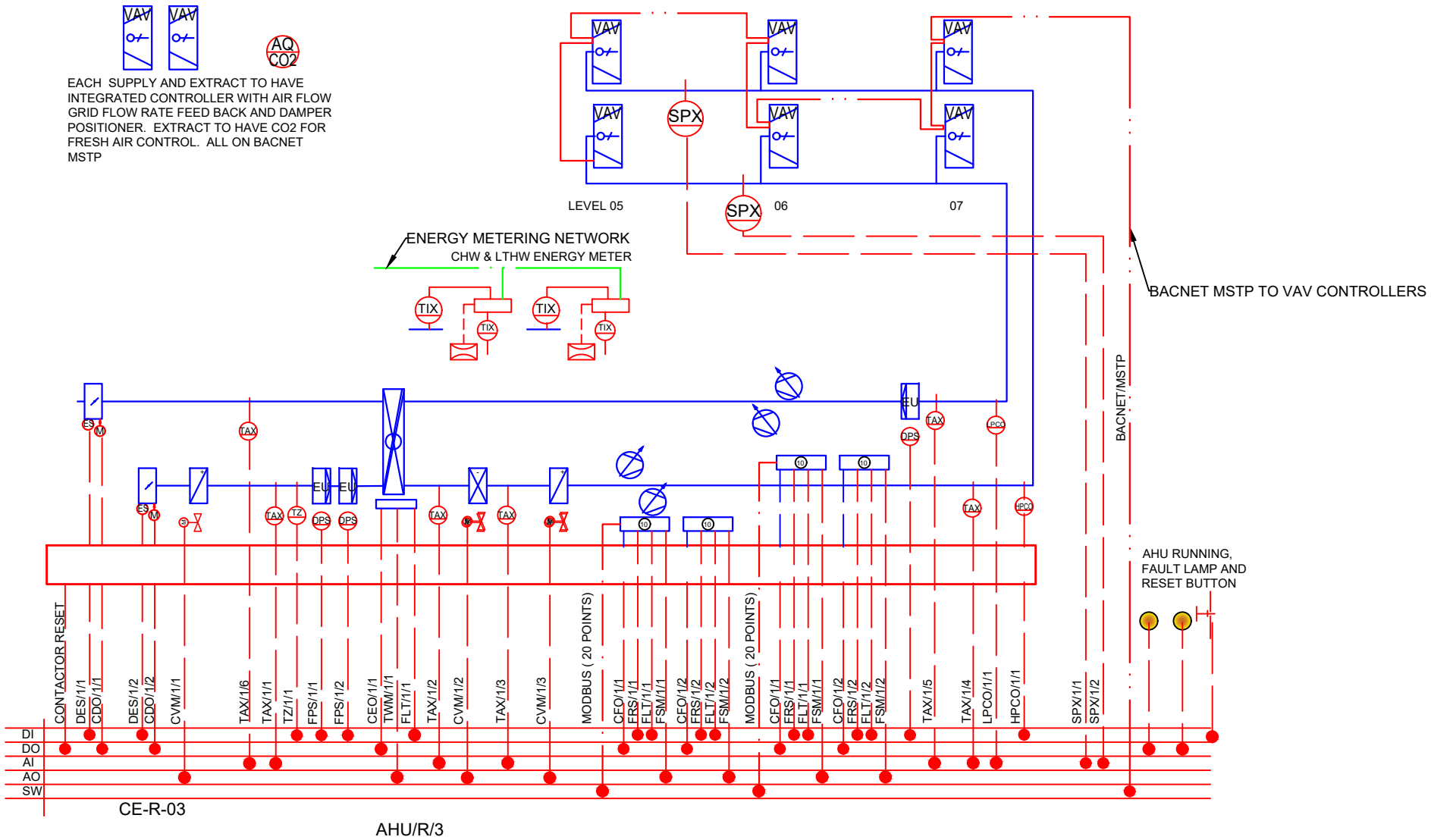

This drawing shall be read in conjunction with all other drawings and the services specification document(s).
All materials and workmanship shall conform with the relevant British & European Standards, Specifications and Codes of Practice.

Rev	Date	Description	By

PRINT IN COLOUR | GENERAL NOTES | Amendments

Client: Fairlawn Controls

Status: STAGE 4

Project: Fairlawn

Drawing Title: AUTOMATIC CONTROLS

VENTILATION 3

www.fairlawncontrols.com alan@fairlawncontrols.com

Drawn	Engineer	Checked	Date origin
	Alan J		

Scale @A3: NTS | File/BIM ref | Project

Sheet number: 1030 | Revision: P-02

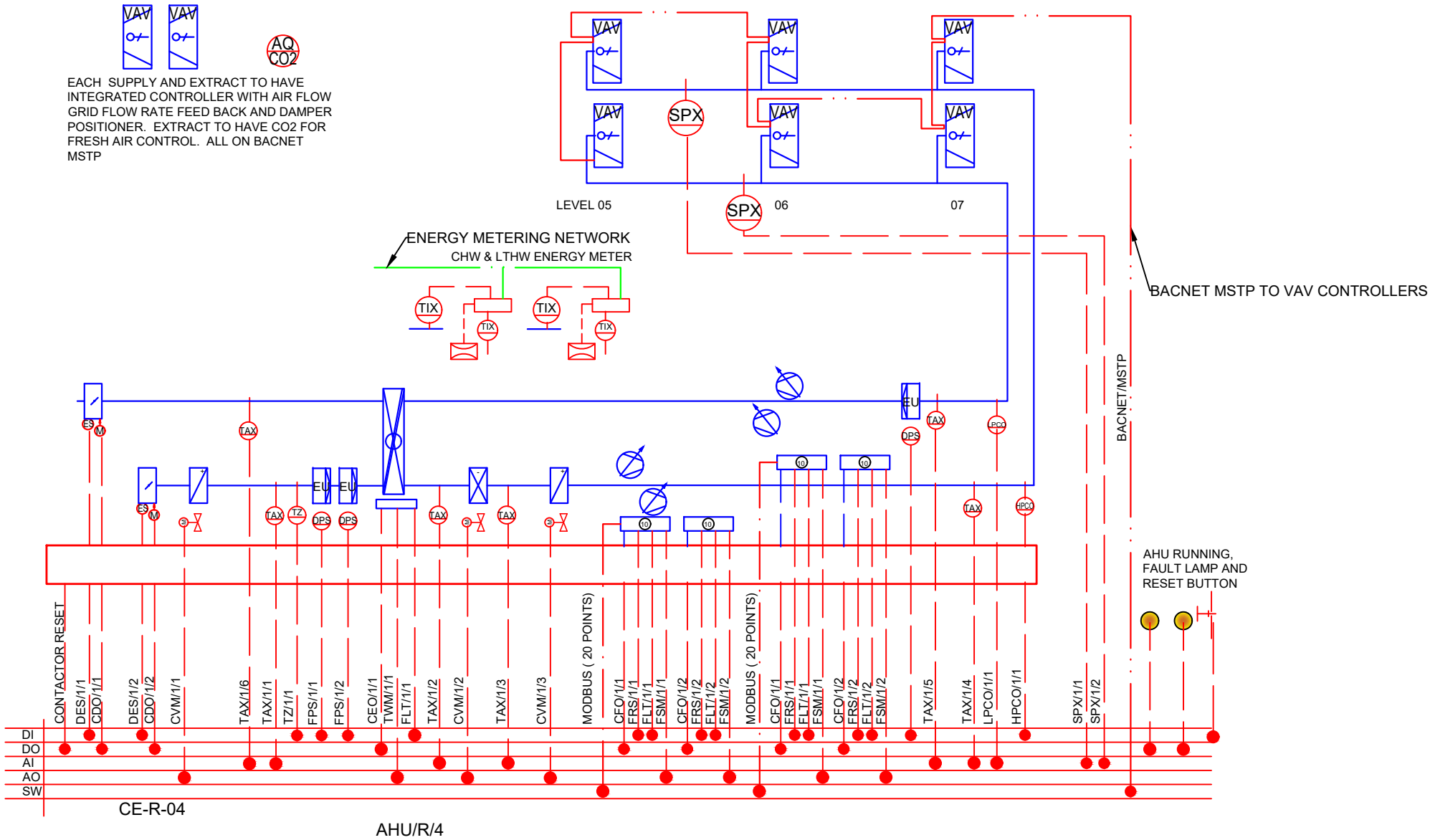

This drawing shall be read in conjunction with all other drawings and the services specification document(s).
All materials and workmanship shall conform with the relevant British & European Standards, Specifications and Codes of Practice.

Rev	Date	Description	By

PRINT IN COLOUR | GENERAL NOTES | Amendments

Client: Fairlawn Controls

Status: STAGE 4

Project: Fairlawn

Drawing Title: AUTOMATIC CONTROLS

VENTILATION 4

www.fairlawncontrols.com alan@fairlawncontrols.com

Drawn	Engineer	Checked	Date origin
	Alan J		

Scale @A3: NTS | File/BIM ref | Project

Sheet number: 1040 | Revision: P-02

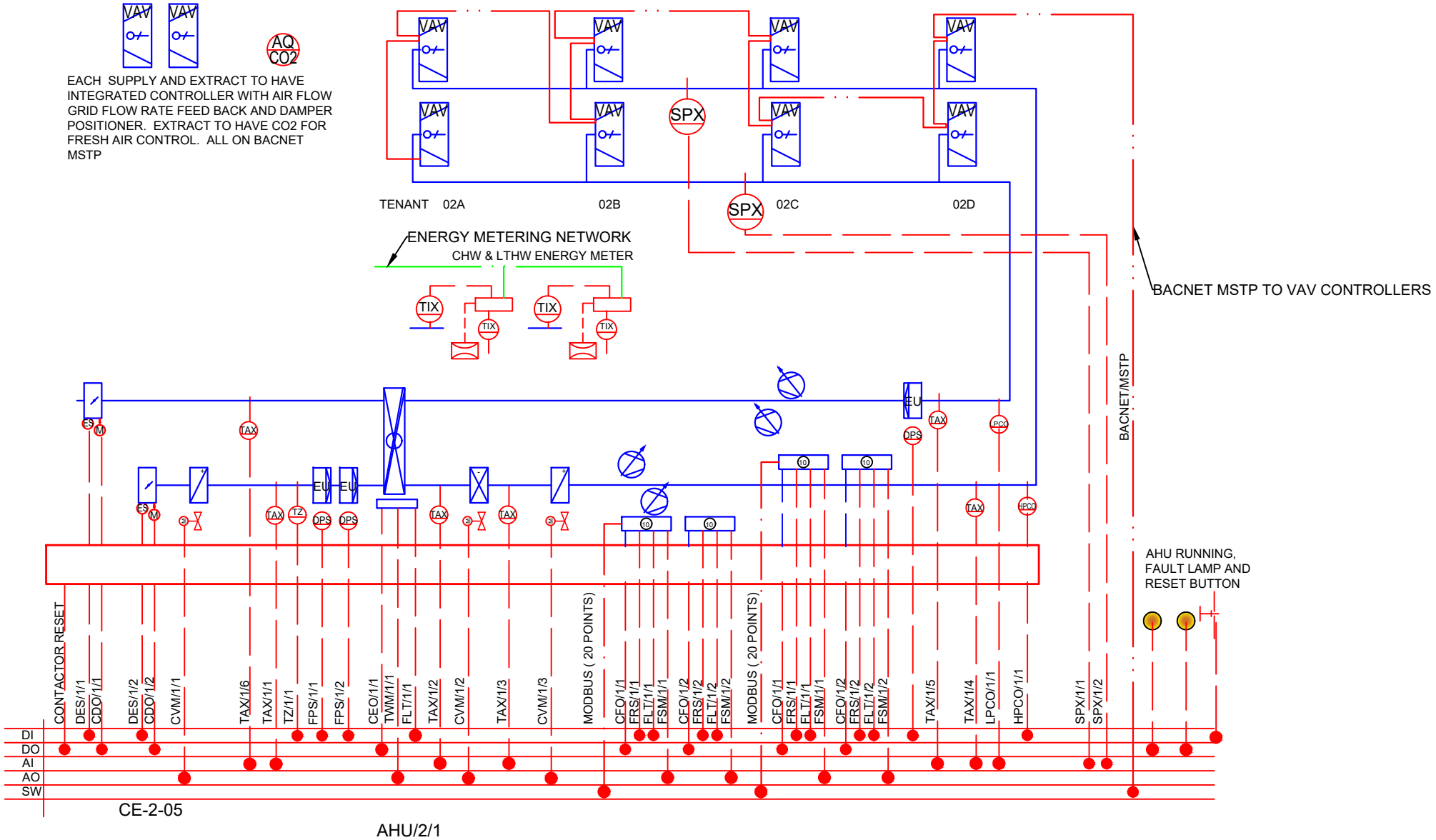

This drawing shall be read in conjunction with all other drawings and the services specification document(s).
All materials and workmanship shall conform with the relevant British & European Standards, Specifications and Codes of Practice.

Rev	Date	Description	By

PRINT IN COLOUR | GENERAL NOTES | Amendments

Client: Fairlawn Controls

Project: Fairlawn

Status: STAGE 4

Drawing Title: AUTOMATIC CONTROLS

VENTILATION 5

www.fairlawncontrols.com alan@fairlawncontrols.com

Drawn	Engineer	Checked	Date origin
	Alan J		

Scale @A3: NTS | File/BIM ref | Project

Sheet number: 1050 | Revision: P-02

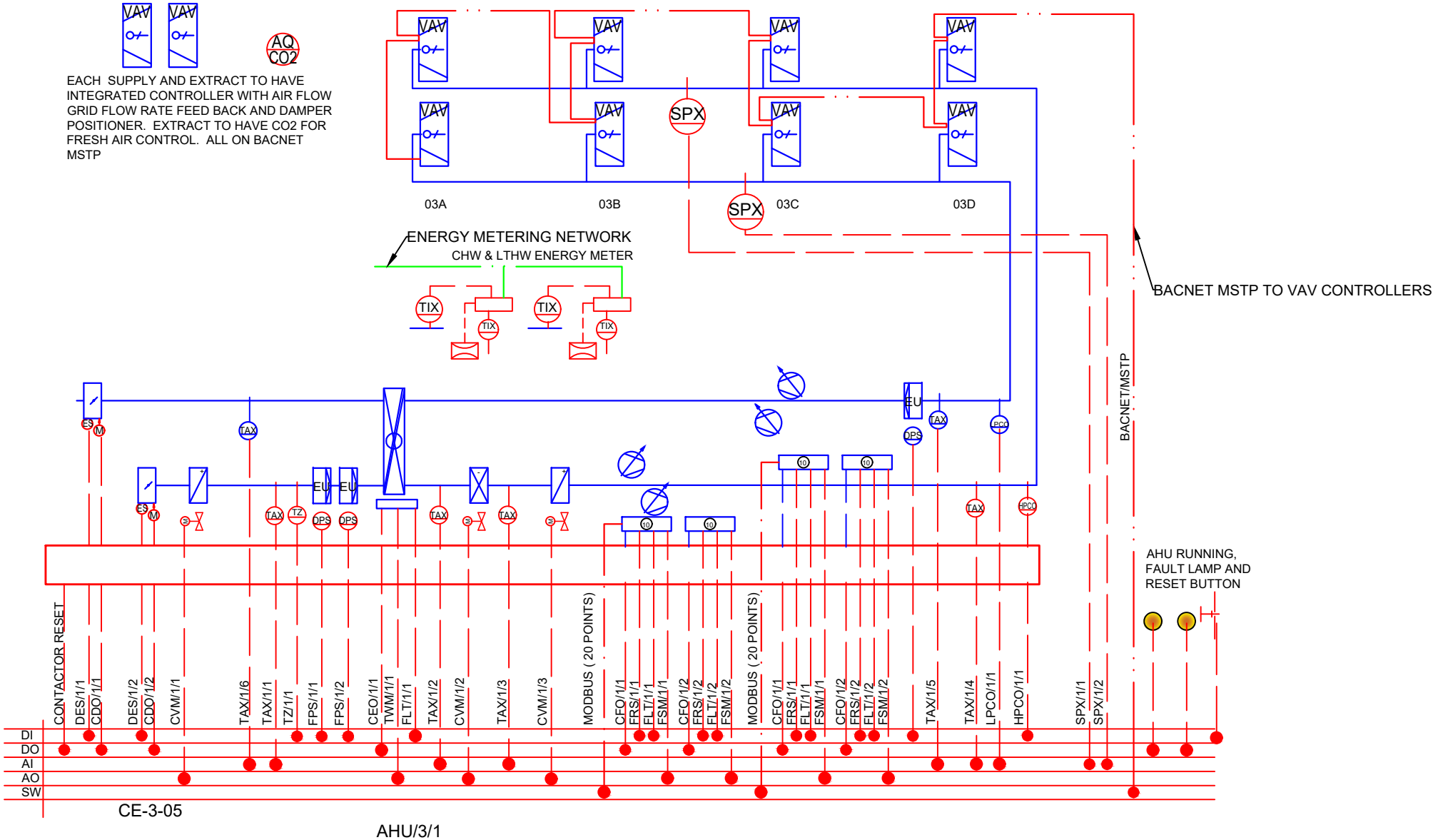

This drawing shall be read in conjunction with all other drawings and the services specification document(s).
All materials and workmanship shall conform with the relevant British & European Standards, Specifications and Codes of Practice.

Rev	Date	Description	By

PRINT IN COLOUR | GENERAL NOTES | Amendments

Client: Fairlawn Controls

Project: Fairlawn

Status: STAGE 4

Drawing Title: AUTOMATIC CONTROLS

VENTILATION 6

www.fairlawncontrols.com alan@fairlawncontrols.com

Drawn	Engineer	Checked	Date origin
	Alan J		

Scale @A3: NTS | File/BIM ref | Project

Sheet number: 1060 | Revision: P-02

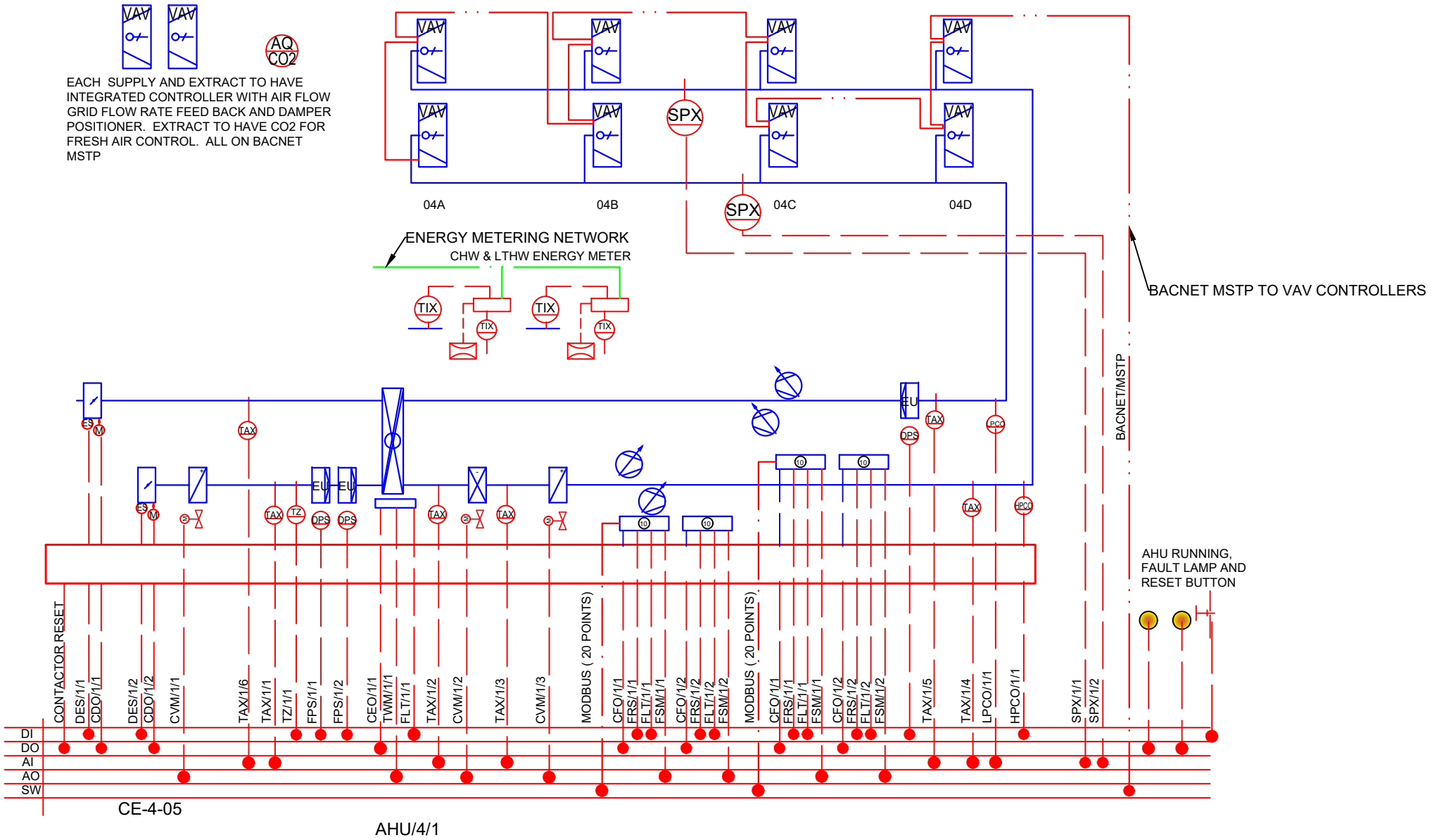

This drawing shall be read in conjunction with all other drawings and the services specification document(s).
All materials and workmanship shall conform with the relevant British & European Standards, Specifications and Codes of Practice.

Rev	Date	Description	By

PRINT IN COLOUR | GENERAL NOTES | Amendments

Client: Fairlawn Controls

Status: STAGE 4

Project: Fairlawn

Drawing Title: AUTOMATIC CONTROLS

VENTILATION 7

www.fairlawncontrols.com alan@fairlawncontrols.com

Drawn	Engineer	Checked	Date origin
	Alan J		

Scale @A3: NTS | File/BIM ref | Project

Sheet number: 1070 | Revision: P-02

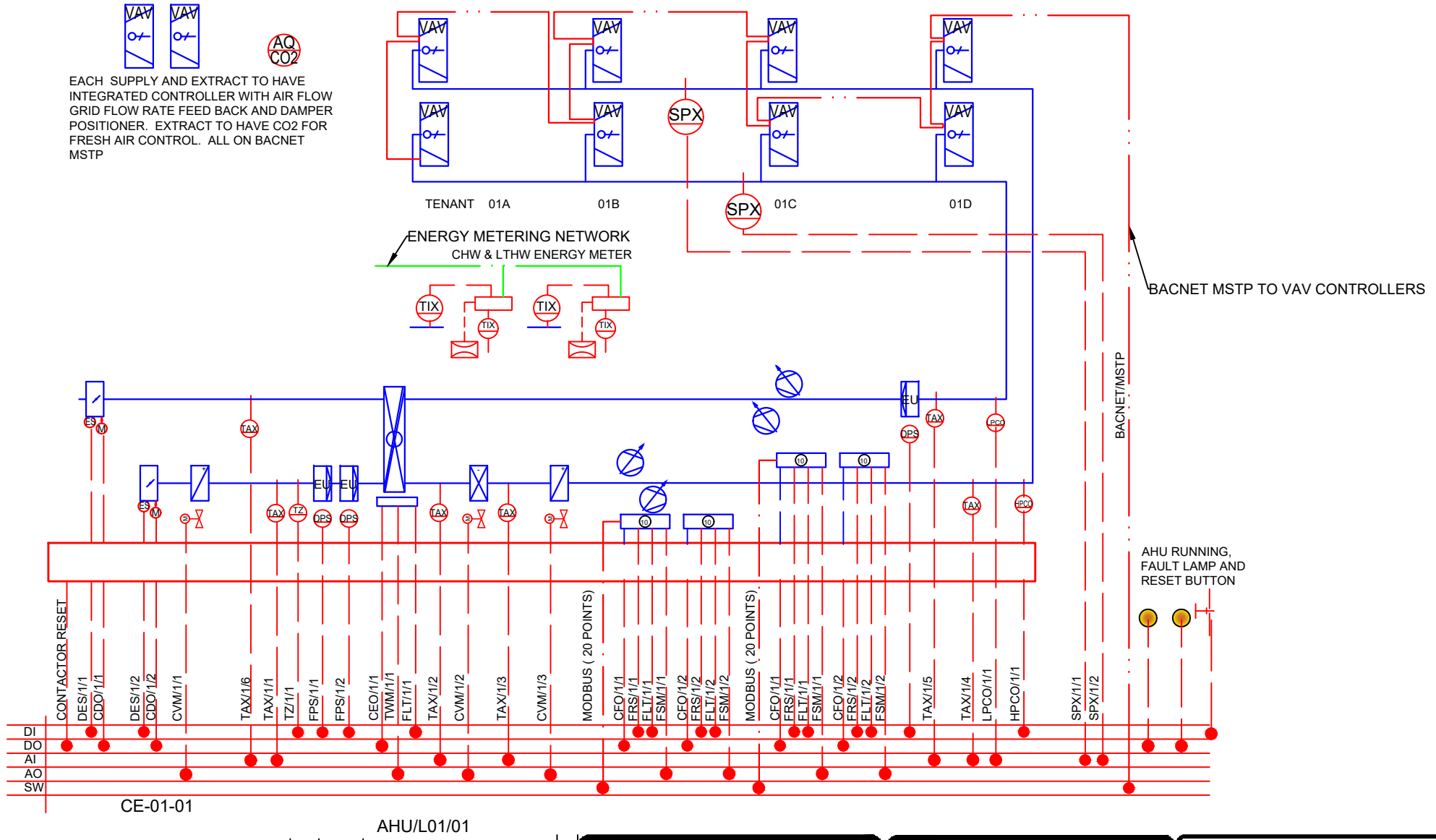

This drawing shall be read in conjunction with all other drawings and the services specification document(s).
All materials and workmanship shall conform with the relevant British & European Standards, Specifications and Codes of Practice.

Rev	Date	Description	By

PRINT IN COLOUR | GENERAL NOTES | Amendments

Client: Fairlawn Controls

Project: Fairlawn

Status: STAGE 4

Drawing Title: AUTOMATIC CONTROLS

VENTILATION 8

www.fairlawncontrols.com alan@fairlawncontrols.com

Drawn	Engineer	Checked	Date origin
	Alan J		

Scale @A3: NTS | File/BIM ref | Project

Sheet number: 1080 | Revision: P-02

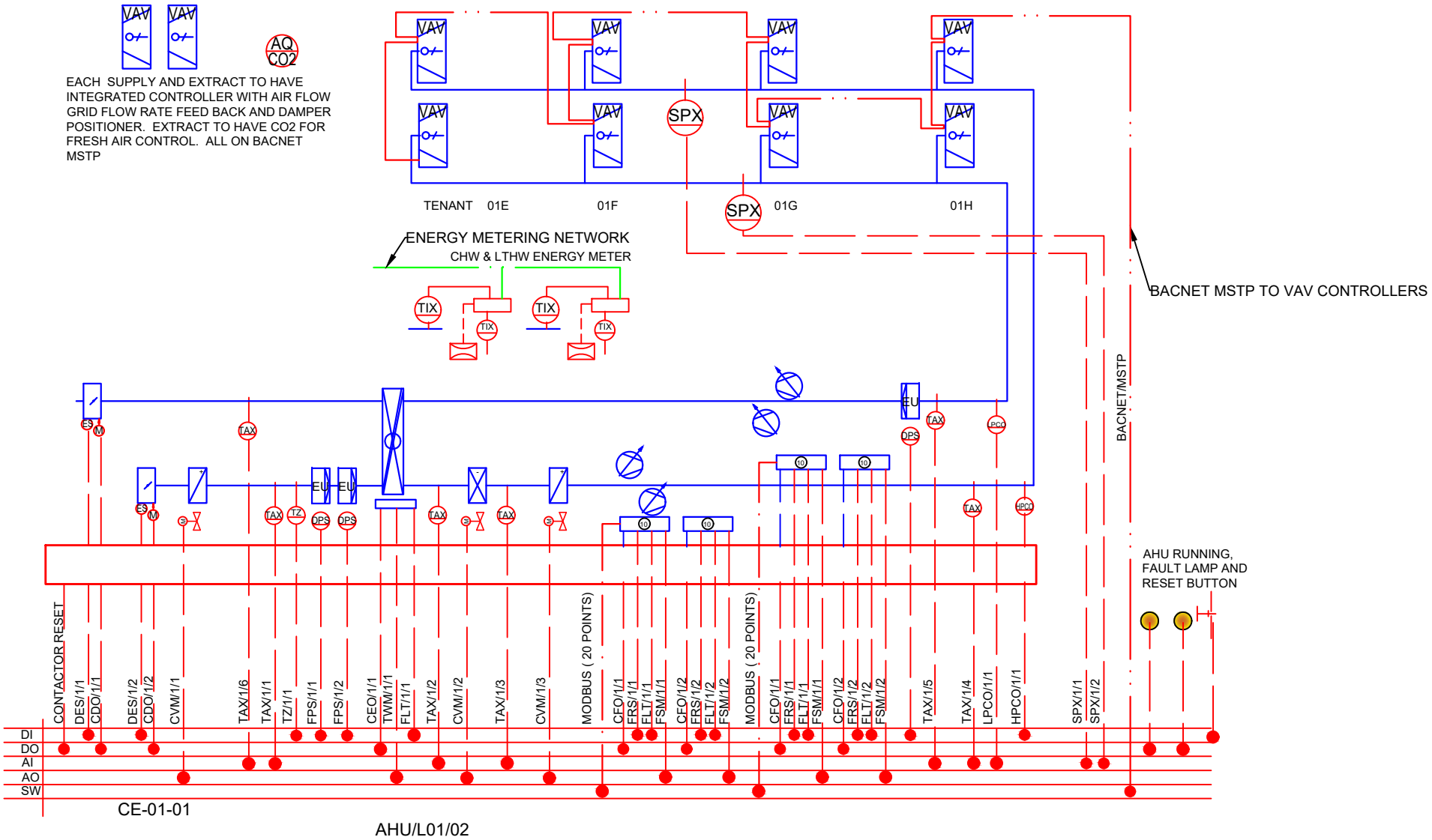

This drawing shall be read in conjunction with all other drawings and the services specification document(s).
All materials and workmanship shall conform with the relevant British & European Standards, Specifications and Codes of Practice.

Rev	Date	Description	By

PRINT IN COLOUR | GENERAL NOTES | Amendments

Client: Fairlawn Controls

Project: Fairlawn

Status: STAGE 4

Drawing Title: AUTOMATIC CONTROLS

VENTILATION 9

www.fairlawncontrols.com alan@fairlawncontrols.com

Drawn	Engineer	Checked	Date origin
	Alan J		

Scale @A3: NTS | File/BIM ref | Project

Sheet number: 1090 | Revision: P-02

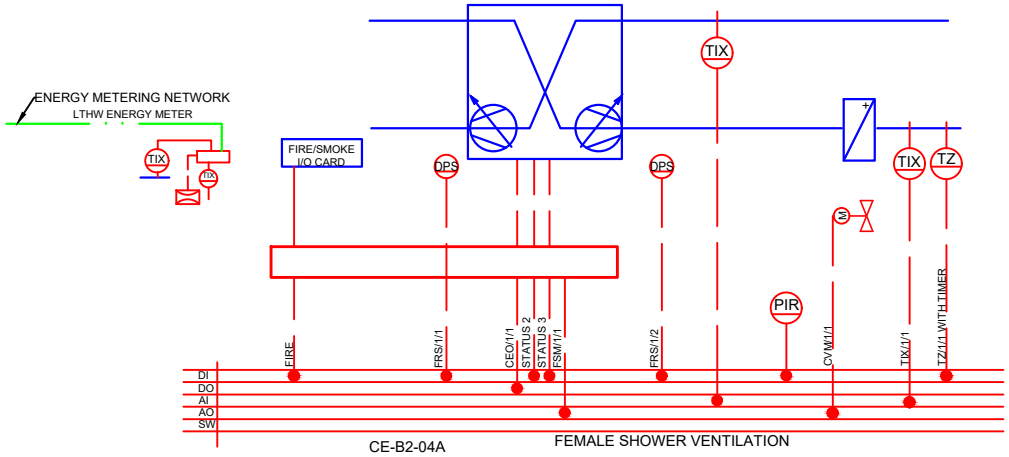

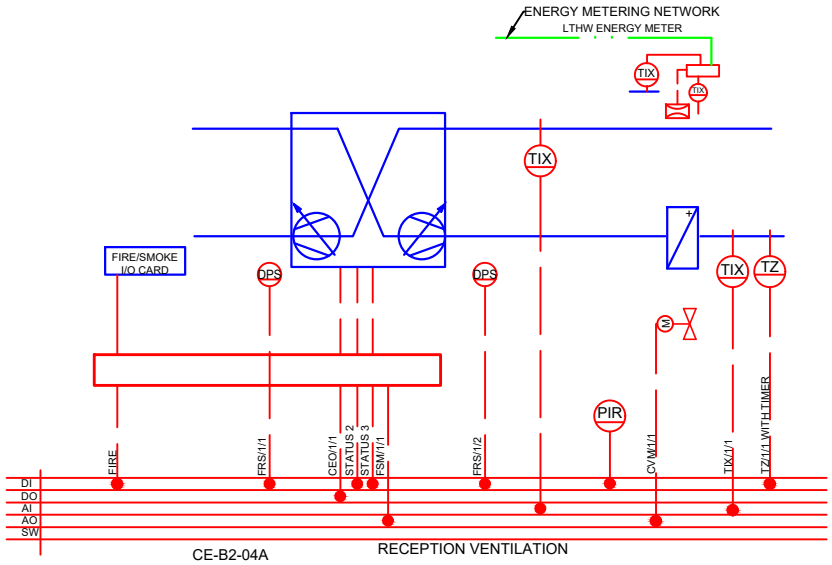

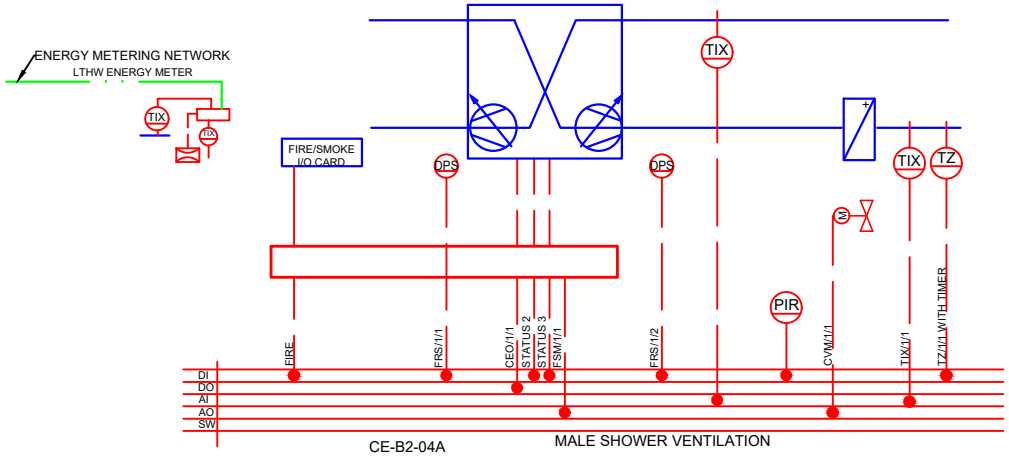

This drawing shall be read in conjunction with all other drawings and the services specification document(s).
All materials and workmanship shall conform with the relevant British & European Standards, Specifications and Codes of Practice.

Rev	Date	Description	By

PRINT IN COLOUR | GENERAL NOTES | Amendments

Client
Fairlawn Controls

Status
STAGE 4

Project
Fairlawn

Drawing Title
AUTOMATIC CONTROLS

VENTILATION 10

www.fairlawncontrols.com alan@fairlawncontrols.com

Drawn	Engineer	Checked	Date origin
	Alan J		

Scale @A3 NTS | File/BIM ref | Project

Sheet number 1100 | Revision P-02

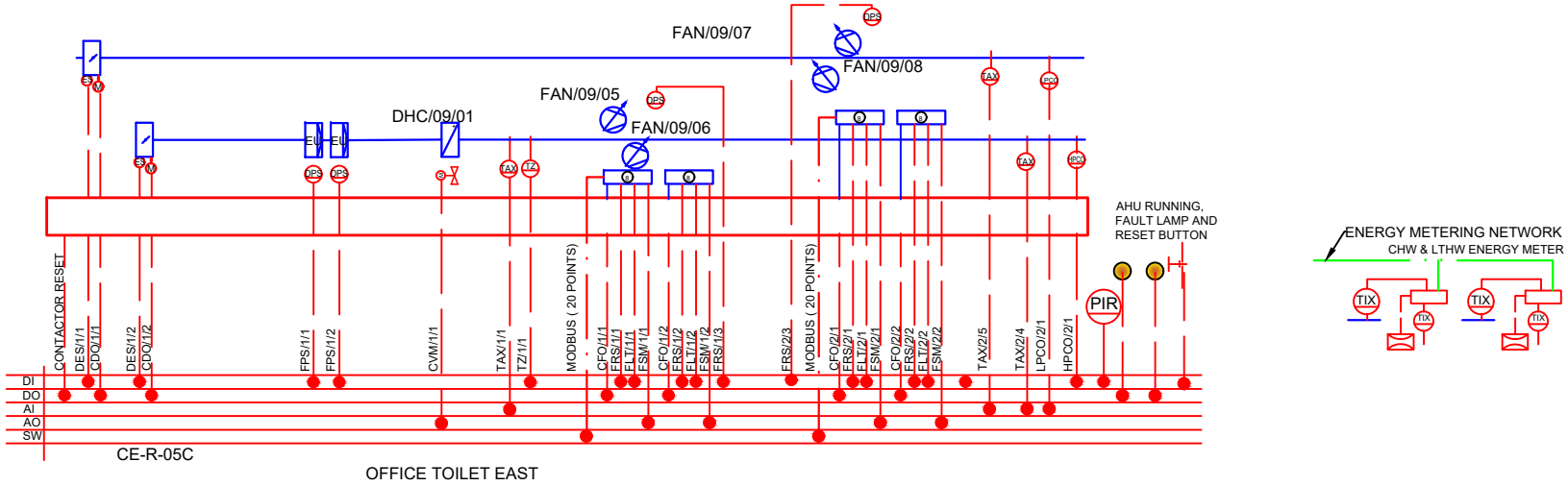

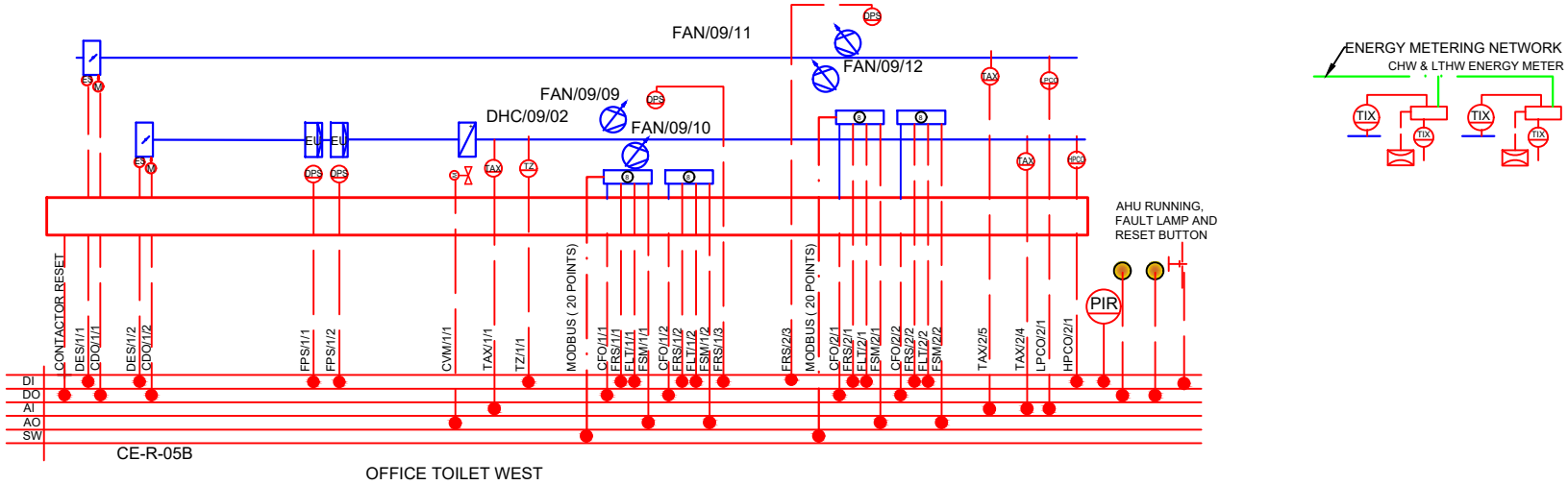

This drawing shall be read in conjunction with all other drawings and the services specification document(s).
All materials and workmanship shall conform with the relevant British & European Standards, Specifications and Codes of Practice.

Rev	Date	Description	By

PRINT IN COLOUR | GENERAL NOTES | Amendments

Client: Fairlawn Controls

Status: STAGE 4

Project: Fairlawn

Drawing Title: AUTOMATIC CONTROLS

VENTILATION 11

www.fairlawncontrols.com alan@fairlawncontrols.com

Drawn	Engineer	Checked	Date origin
	Alan J		

Scale @A3: NTS | File/BIM ref | Project

Sheet number: 1110 | Revision: P-02

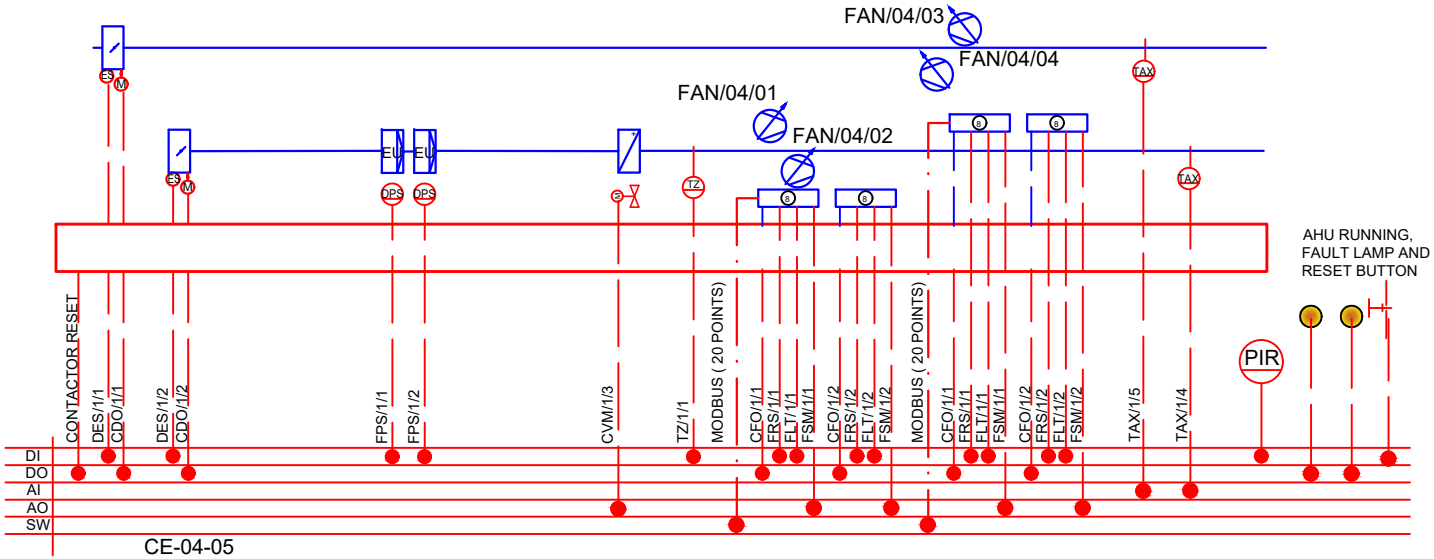

OFFICE ACCESSIBLE TOILET VENTILATION

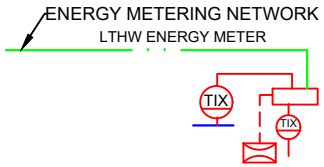

This drawing shall be read in conjunction with all other drawings and the services specification document(s).
All materials and workmanship shall conform with the relevant British & European Standards, Specifications and Codes of Practice.

PRINT IN COLOUR | GENERAL NOTES

Rev	Date	Description	By

Amendments

Client: Fairlawn Controls

Status: STAGE 4

Project: Fairlawn

Drawing Title: AUTOMATIC CONTROLS

VENTILATION 12

www.fairlawncontrols.com alan@fairlawncontrols.com

Drawn	Engineer	Checked	Date origin
	Alan J		

Scale @A3: NTS | File/BIM ref | Project

Sheet number: 1120 | Revision: P-02

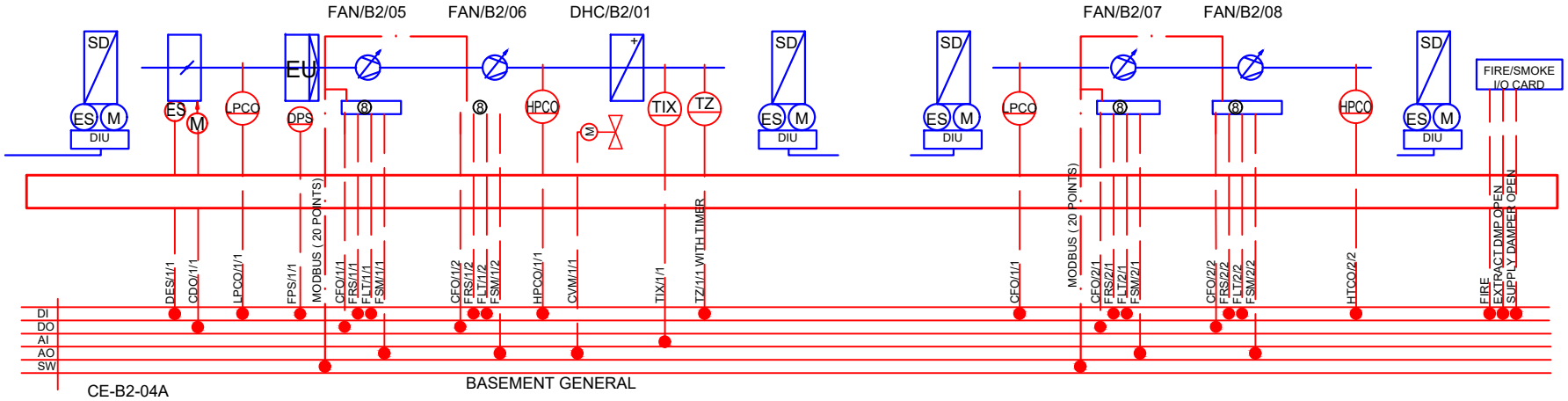

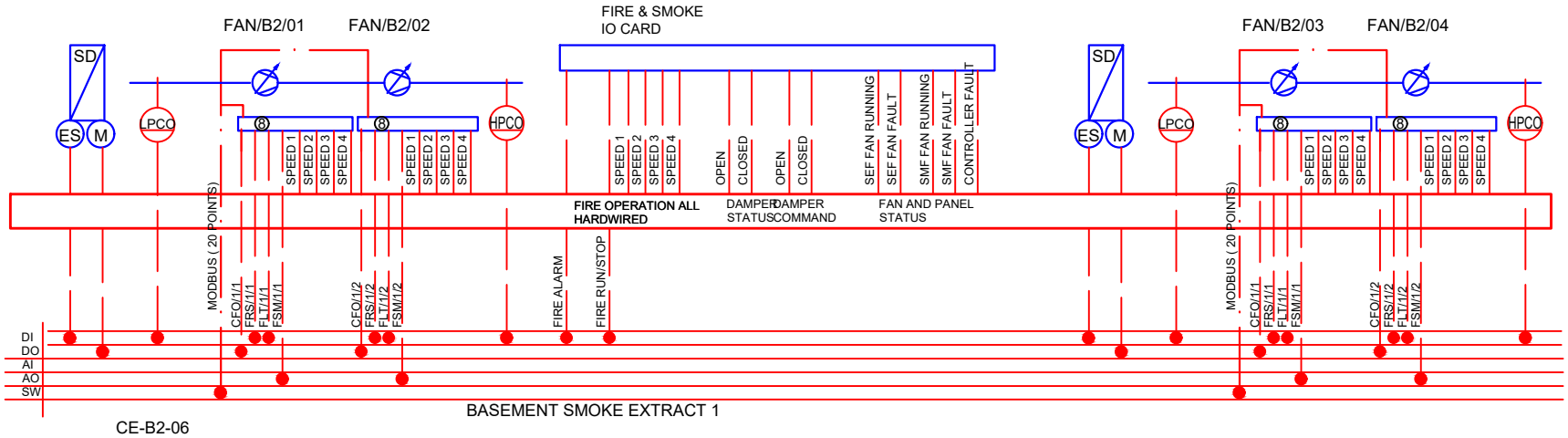

This drawing shall be read in conjunction with all other drawings and the services specification document(s).
All materials and workmanship shall conform with the relevant British & European Standards, Specifications and Codes of Practice.

Rev	Date	Description	By

PRINT IN COLOUR | GENERAL NOTES | Amendments

Client: Fairlawn Controls

Status: STAGE 4

Project: Fairlawn

Drawing Title: AUTOMATIC CONTROLS

VENTILATION 12

www.fairlawncontrols.com alan@fairlawncontrols.com

Drawn | Engineer: Alan J | Checked | Date origin

Scale @A3: NTS | File/BIM ref | Project

Sheet number | Revision: 2010 P-02

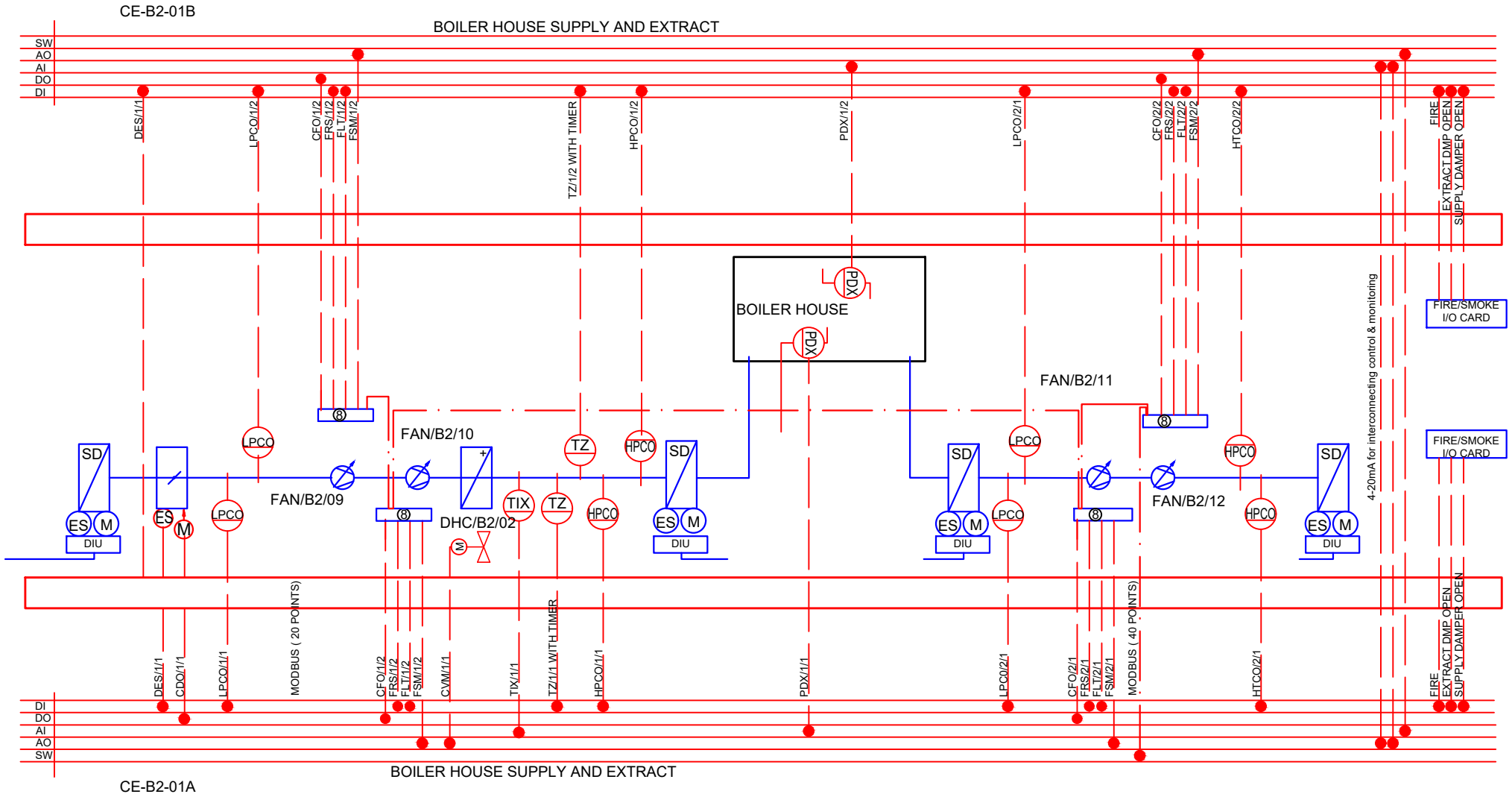

This drawing shall be read in conjunction with all other drawings and the services specification document(s).
All materials and workmanship shall conform with the relevant British & European Standards, Specifications and Codes of Practice.

Rev	Date	Description	By

PRINT IN COLOUR | GENERAL NOTES | Amendments

Client: Fairlawn Controls

Status: STAGE 4

Project: Fairlawn

Drawing Title: AUTOMATIC CONTROLS

VENTILATION 14

www.fairlawncontrols.com alan@fairlawncontrols.com

Drawn | Engineer: Alan J | Checked | Date origin

Scale @A3: NTS | File/BIM ref | Project

Sheet number | Revision: 2015 P-02

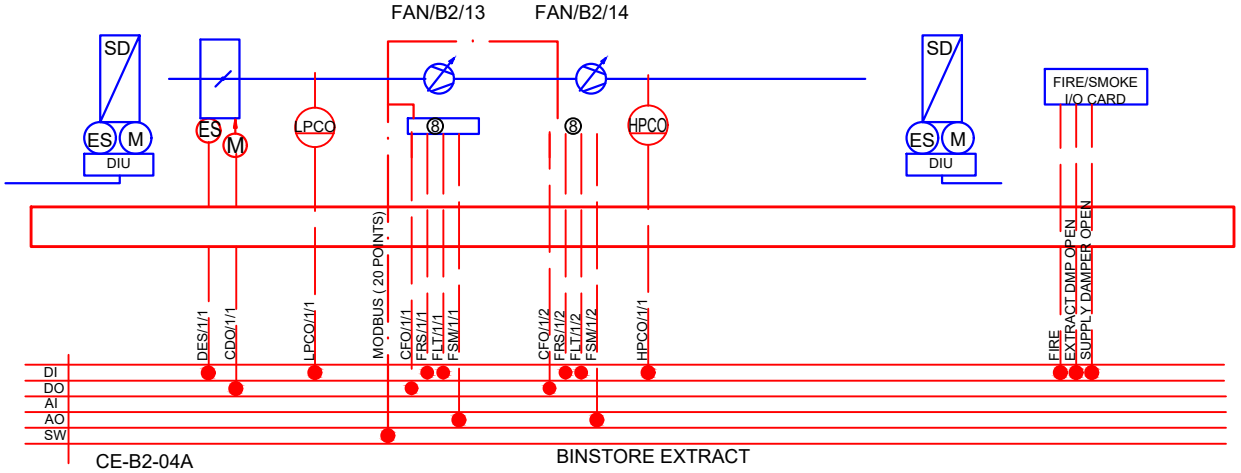

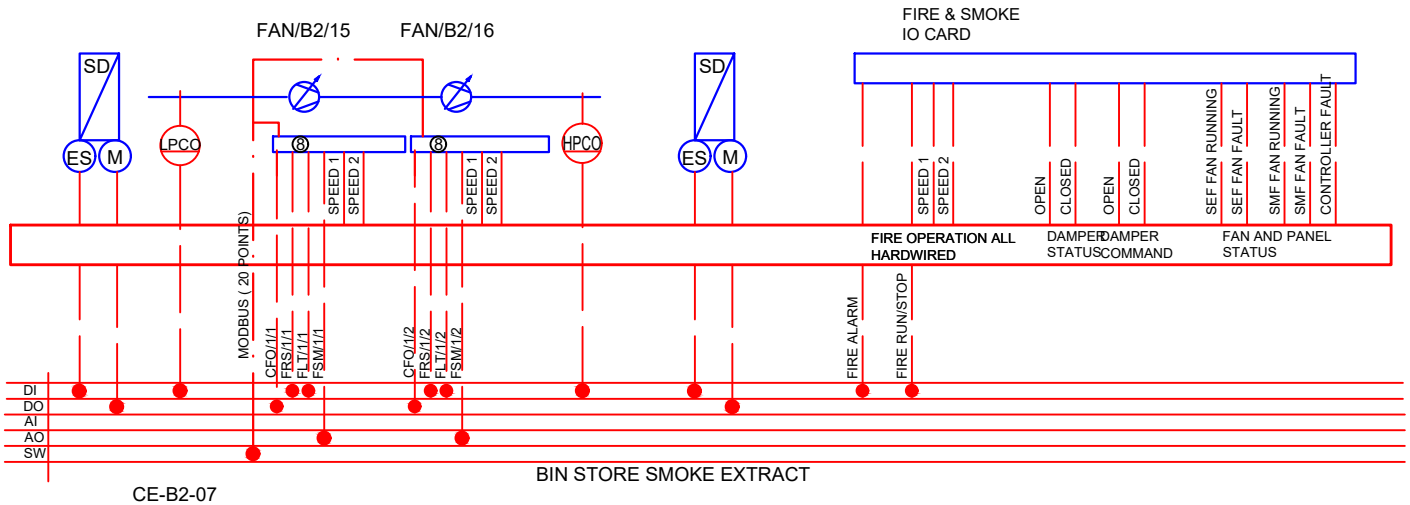

This drawing shall be read in conjunction with all other drawings and the services specification document(s).
All materials and workmanship shall conform with the relevant British & European Standards, Specifications and Codes of Practice.

Rev	Date	Description	By

PRINT IN COLOUR | GENERAL NOTES | Amendments

Client: Fairlawn Controls

Status: STAGE 4

Project: Fairlawn

Drawing Title: AUTOMATIC CONTROLS

VENTILATION 15

www.fairlawncontrols.com alan@fairlawncontrols.com

Drawn | Engineer: Alan J | Checked | Date origin

Scale @A3: NTS | File/BIM ref | Project

Sheet number | Revision: 2020 P-02

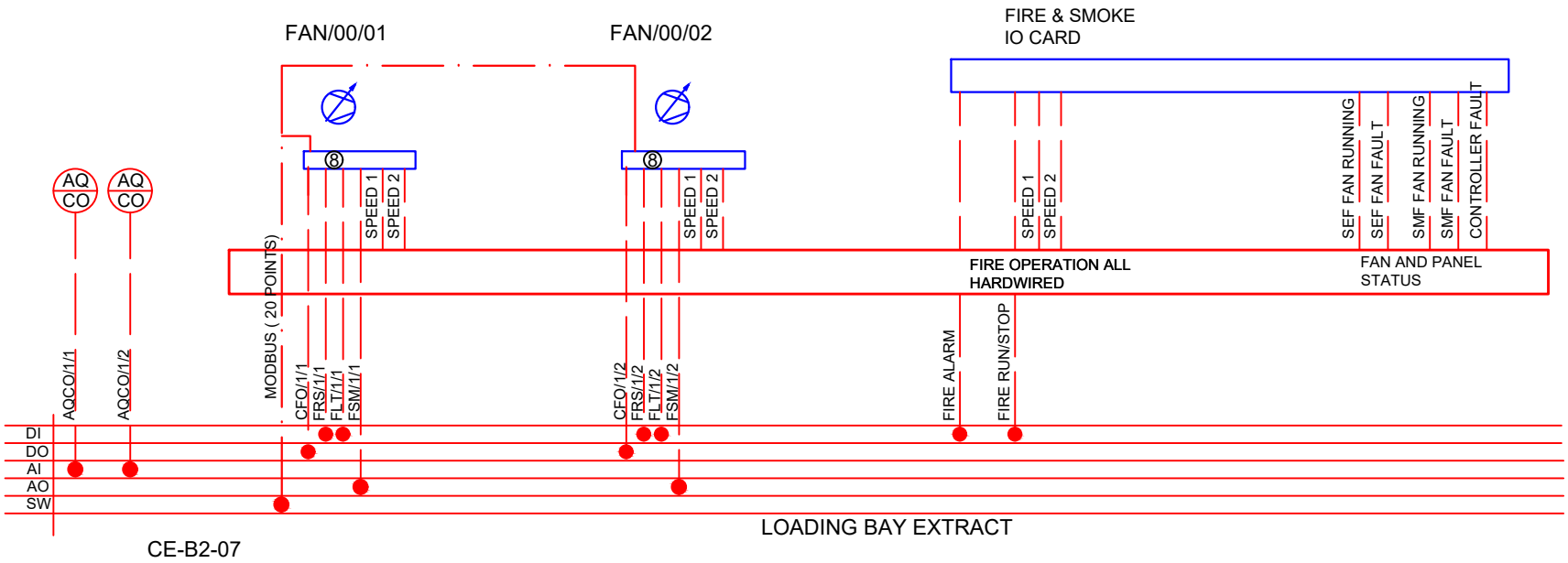

This drawing shall be read in conjunction with all other drawings and the services specification document(s).
All materials and workmanship shall conform with the relevant British & European Standards, Specifications and Codes of Practice.

Rev	Date	Description	By
		System added	

Amendments

PRINT IN COLOUR | GENERAL NOTES

Client: Fairlawn Controls

Status: STAGE 4

Project: Fairlawn

Drawing Title: AUTOMATIC CONTROLS

VENTILATION 16

www.fairlawncontrols.com alan@fairlawncontrols.com

Drawn | Engineer: Alan J | Checked | Date origin

Scale @A3: NTS | File/BIM ref | Project

Sheet number: 2040 | Revision: P-02

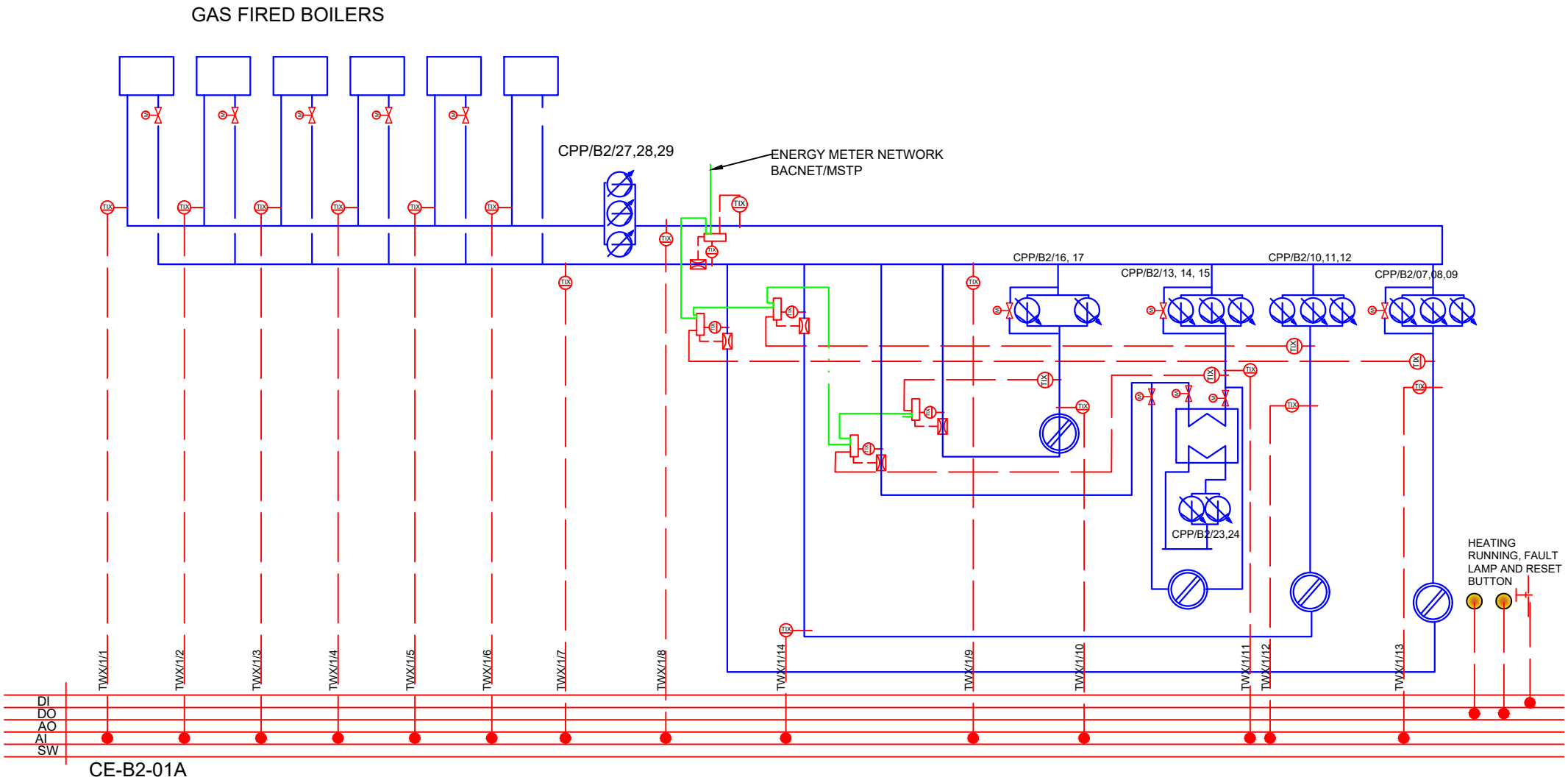

This drawing shall be read in conjunction with all other drawings and the services specification document(s).
All materials and workmanship shall conform with the relevant British & European Standards, Specifications and Codes of Practice.

Rev	Date	Description	By

PRINT IN COLOUR | GENERAL NOTES | Amendments

Client
Fairlawn Controls

Status
STAGE 4

Project
Fairlawn

Drawing Title
AUTOMATIC CONTROLS

HEATING 1

www.fairlawncontrols.com alan@fairlawncontrols.com

Drawn	Engineer	Checked	Date origin
	Alan J		

Scale @A3
NTS

File/BIM ref

Project

Sheet number

Revision
5010 P-02

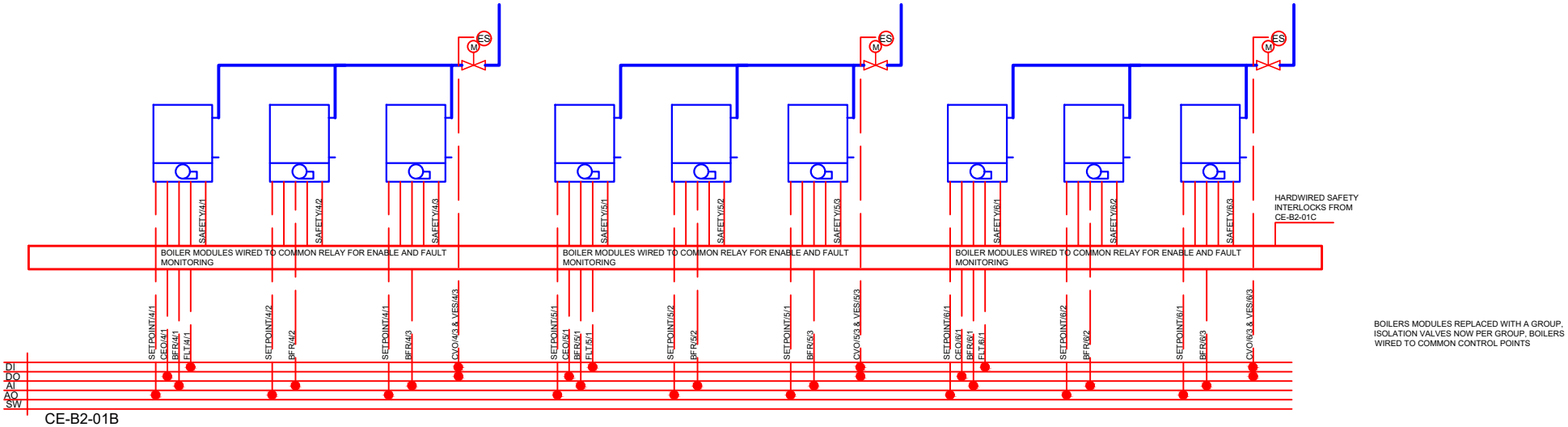

BOILERS MODULES REPLACED WITH A GROUP, ISOLATION VALVES NOW PER GROUP, BOILERS WIRED TO COMMON CONTROL POINTS

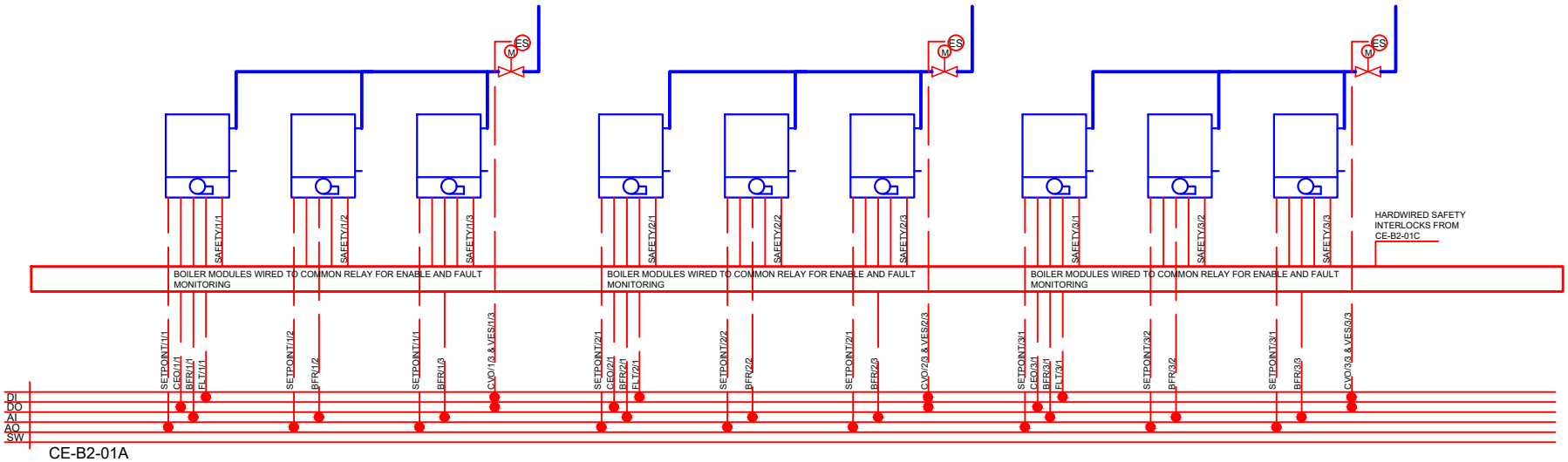

This drawing shall be read in conjunction with all other drawings and the services specification document(s).
All materials and workmanship shall conform with the relevant British & European Standards, Specifications and Codes of Practice.

Rev	Date	Description	By

PRINT IN COLOUR | GENERAL NOTES | Amendments

Client
Fairlawn Controls

Status
STAGE 4

Project
Fairlawn

Drawing Title
AUTOMATIC CONTROLS

HEATING 2

www.fairlawncontrols.com alan@fairlawncontrols.com

Drawn	Engineer	Checked	Date origin
	Alan J		

Scale @A3 NTS | File/BIM ref | Project

Sheet number 5020 | Revision P-02

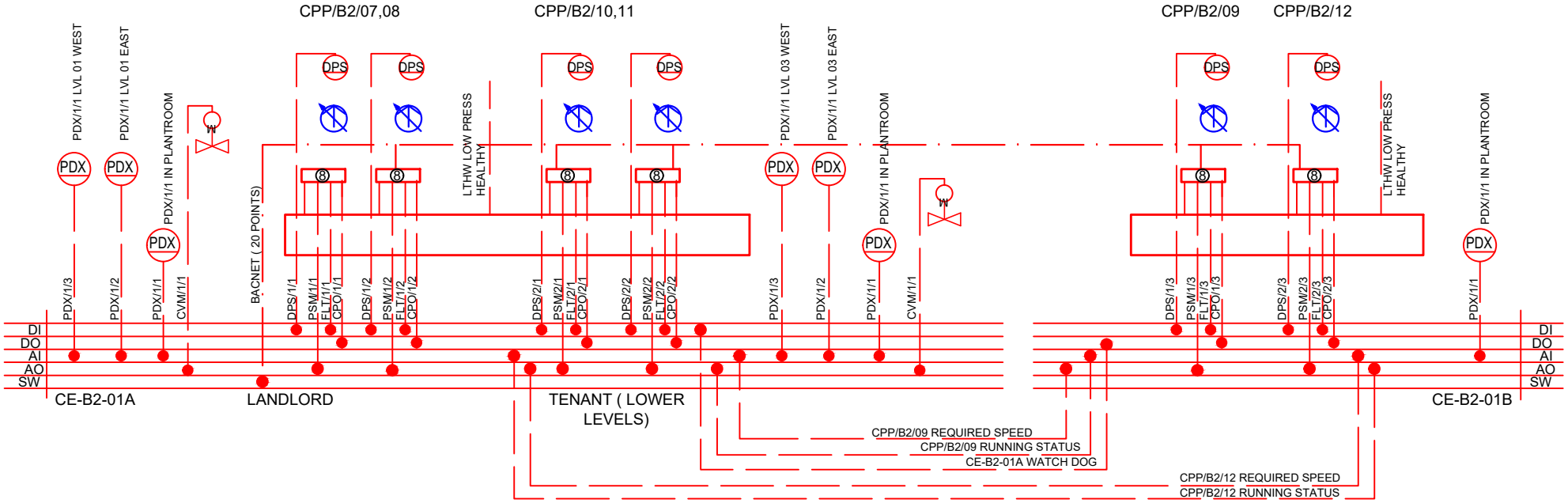

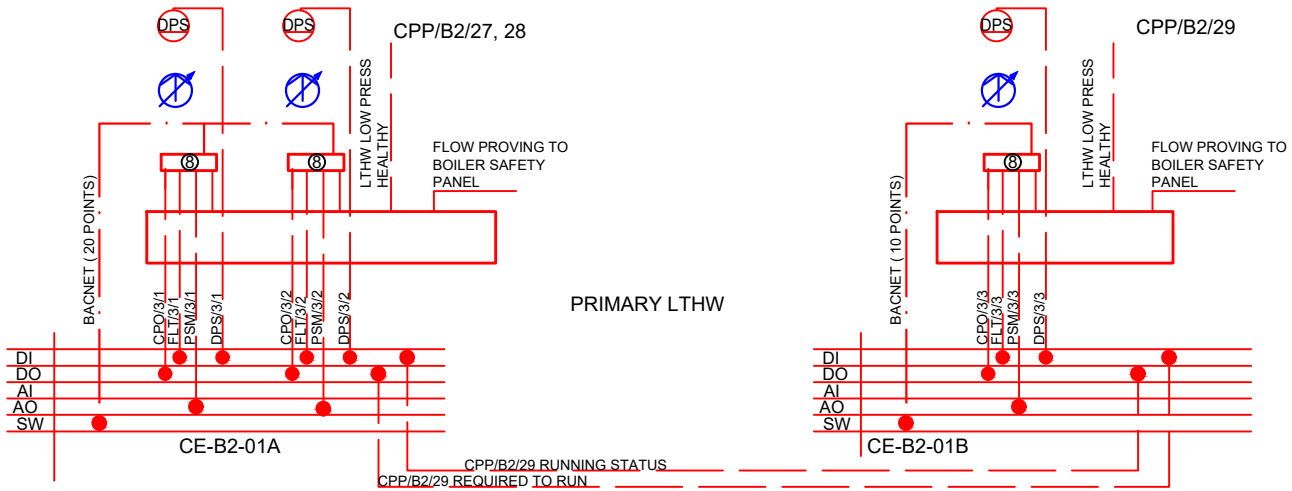

This drawing shall be read in conjunction with all other drawings and the services specification document(s).
All materials and workmanship shall conform with the relevant British & European Standards, Specifications and Codes of Practice.

Rev	Date	Description	By

PRINT IN COLOUR | GENERAL NOTES | Amendments

Client: Fairlawn Controls

Status: STAGE 4

Project: Fairlawn

Drawing Title: AUTOMATIC CONTROLS

HEATING 4

www.fairlawncontrols.com alan@fairlawncontrols.com

Drawn | Engineer: Alan J | Checked | Date origin

Scale @A3: NTS | File/BIM ref | Project

Sheet number: 5030 | Revision: P-02

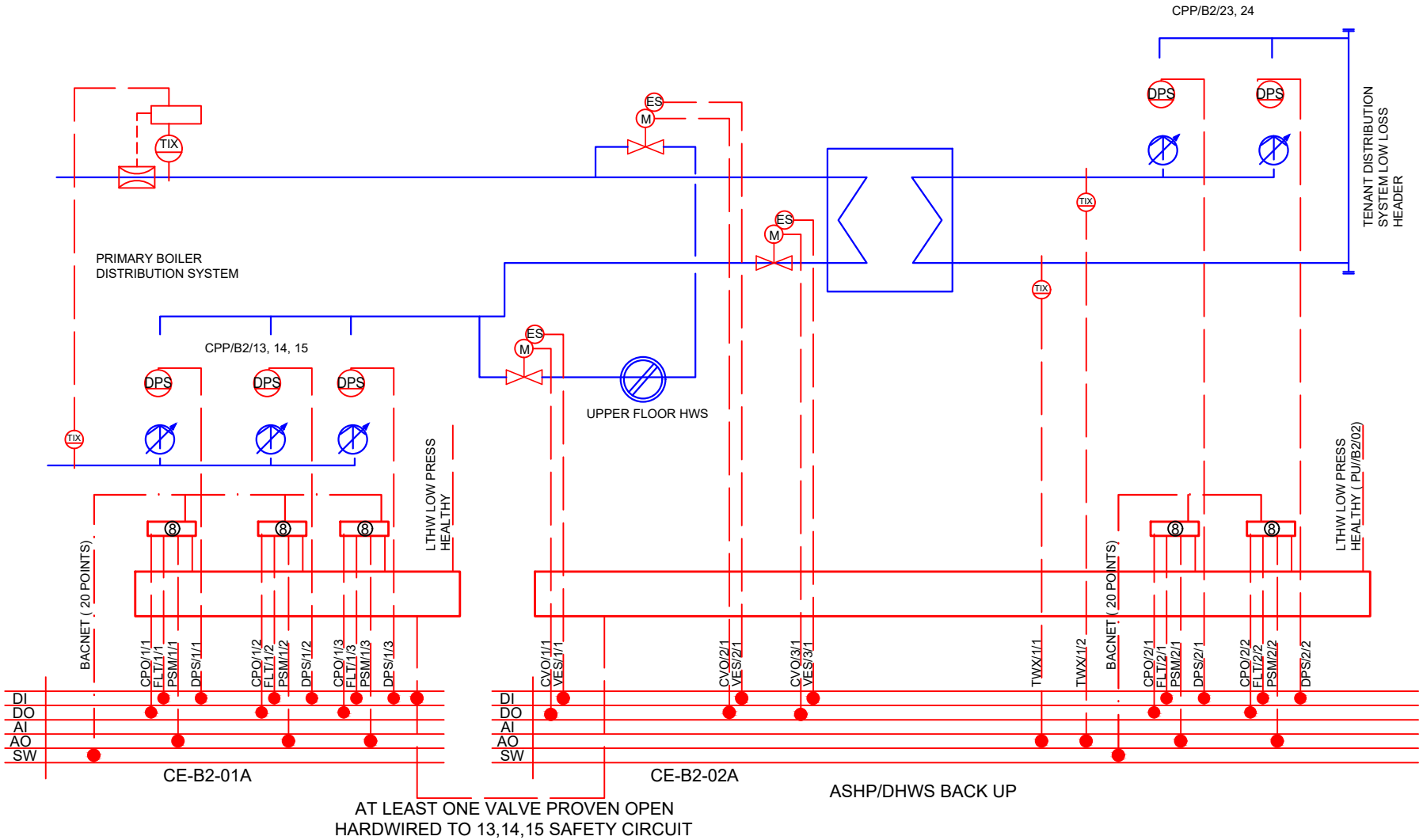

This drawing shall be read in conjunction with all other drawings and the services specification document(s).
All materials and workmanship shall conform with the relevant British & European Standards, Specifications and Codes of Practice.

Rev	Date	Description	By

PRINT IN COLOUR | GENERAL NOTES | Amendments

Client: Fairlawn Controls

Status: STAGE 4

Project: Fairlawn

Drawing Title: AUTOMATIC CONTROLS

HEATING 5

www.fairlawncontrols.com alan@fairlawncontrols.com

Drawn | Engineer: Alan J | Checked | Date origin

Scale @A3: NTS | File/BIM ref | Project

Sheet number | Revision: 5040 P-02

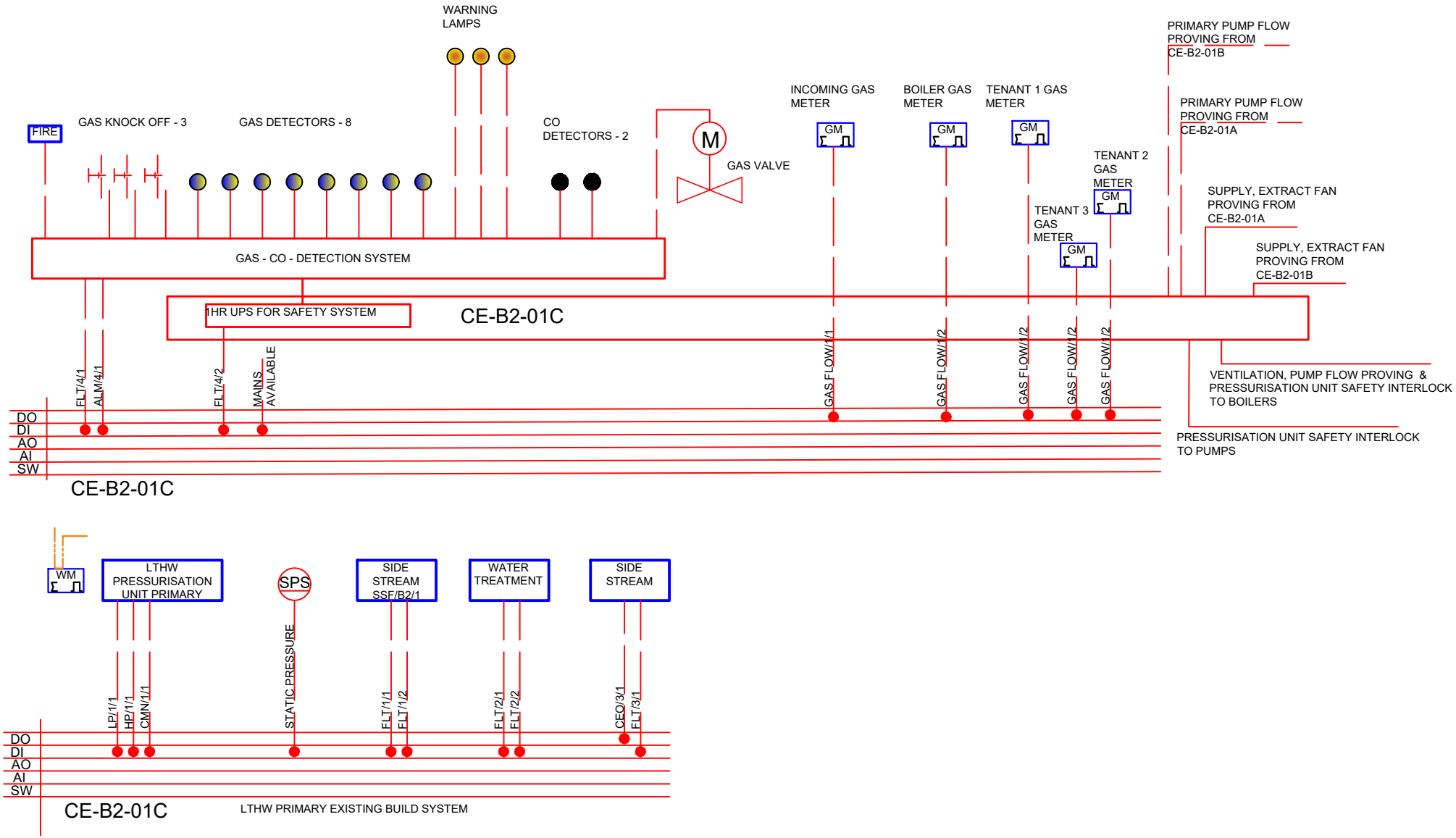

This drawing shall be read in conjunction with all other drawings and the services specification document(s).
All materials and workmanship shall conform with the relevant British & European Standards, Specifications and Codes of Practice.

Rev	Date	Description	By

PRINT IN COLOUR | GENERAL NOTES | Amendments

Client: Fairlawn Controls

Status: STAGE 4

Project: Fairlawn

Drawing Title: AUTOMATIC CONTROLS

HEATING 6

www.fairlawncontrols.com alan@fairlawncontrols.com

Drawn	Engineer	Checked	Date origin
	Alan J		

Scale @A3: NTS | File/BIM ref | Project

Sheet number: 5100 | Revision: P-02

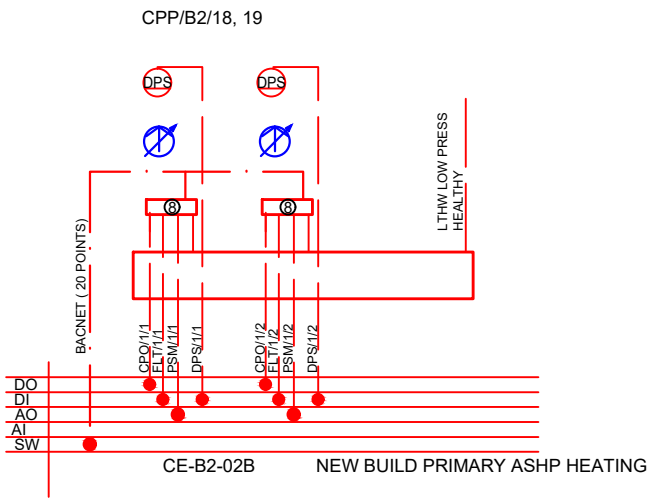

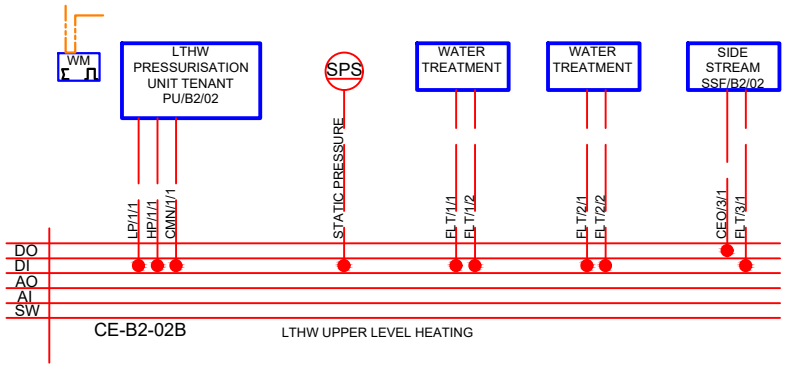

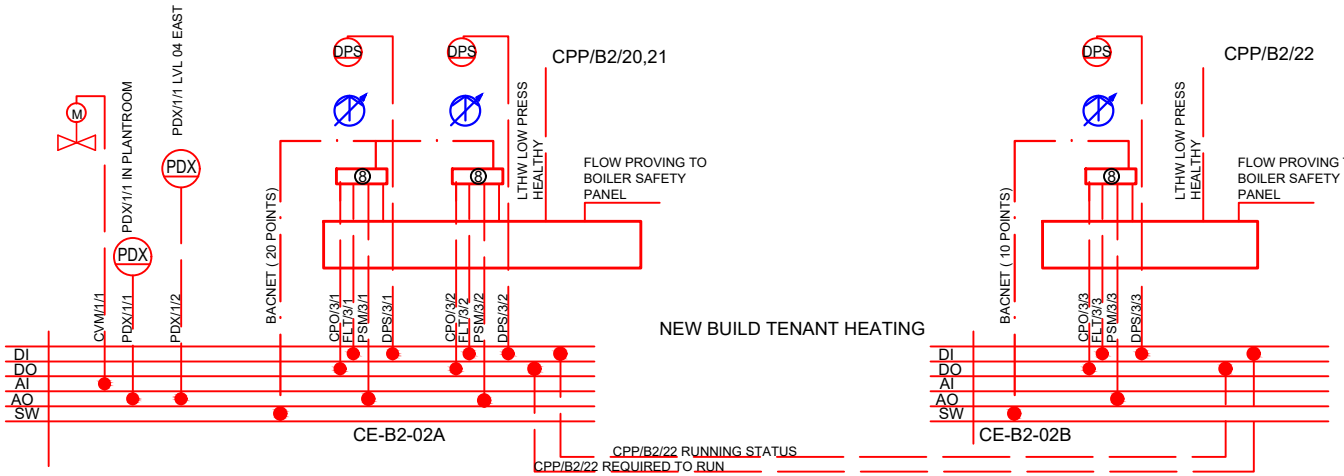

This drawing shall be read in conjunction with all other drawings and the services specification document(s).
All materials and workmanship shall conform with the relevant British & European Standards, Specifications and Codes of Practice.

Rev	Date	Description	By

PRINT IN COLOUR | GENERAL NOTES | Amendments

Client: Fairlawn Controls

Status: STAGE 4

Project: Fairlawn

Drawing Title: AUTOMATIC CONTROLS

HEATING 7
NEW BUILD

www.fairlawncontrols.com alan@fairlawncontrols.com

Drawn	Engineer	Checked	Date origin
	Alan J		

Scale @A3: NTS | File/BIM ref | Project

Sheet number: 5210 | Revision: P-02

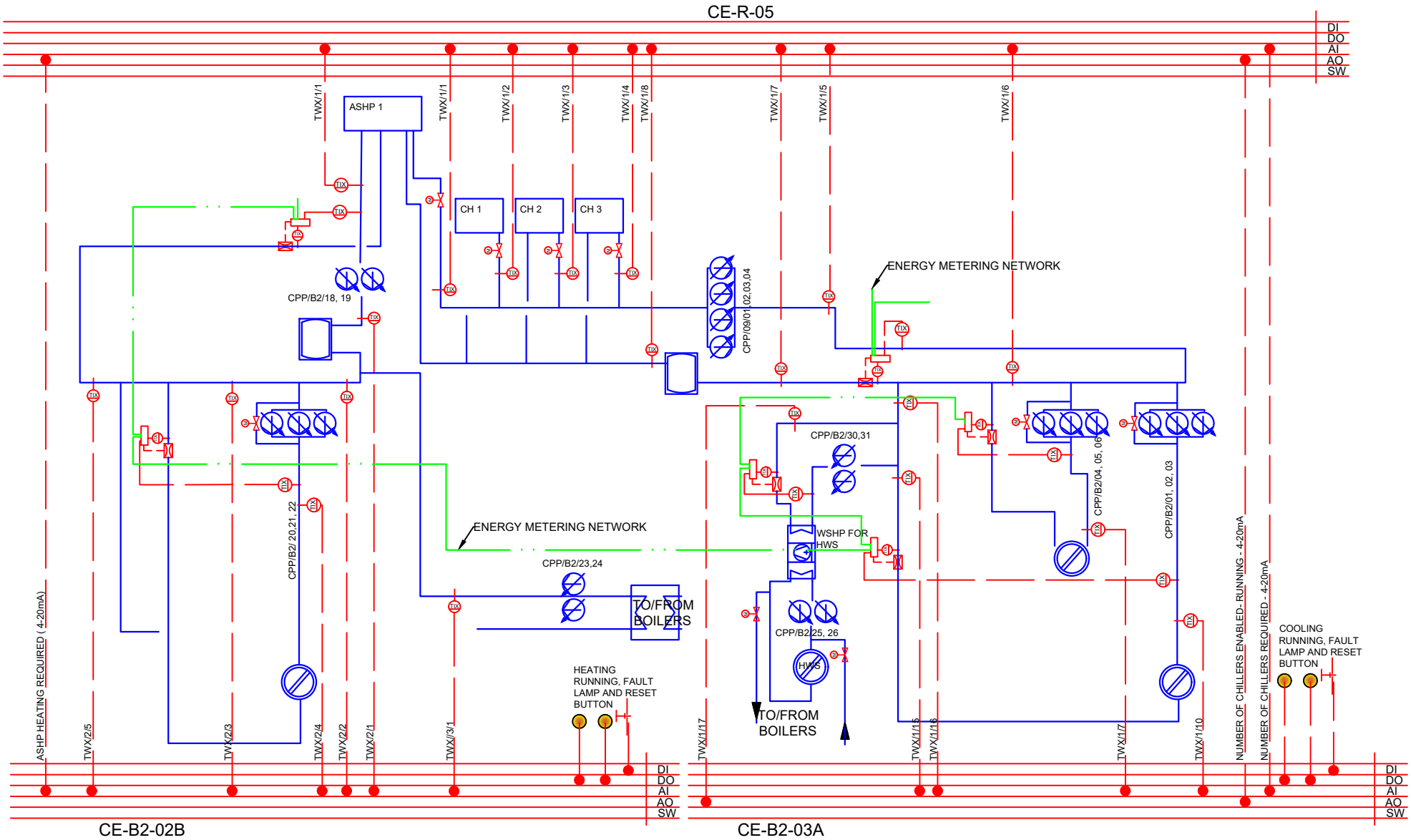

This drawing shall be read in conjunction with all other drawings and the services specification document(s).
All materials and workmanship shall conform with the relevant British & European Standards, Specifications and Codes of Practice.

Rev	Date	Description	By

PRINT IN COLOUR | GENERAL NOTES | Amendments

Client: Fairlawn Controls

Status: STAGE 4

Project: Fairlawn

Drawing Title: AUTOMATIC CONTROLS

COOLING 1

www.fairlawncontrols.com alan@fairlawncontrols.com

Drawn	Engineer	Checked	Date origin
	Alan J		

Scale @A3: NTS | File/BIM ref | Project

Sheet number: 6010 | Revision: P-02

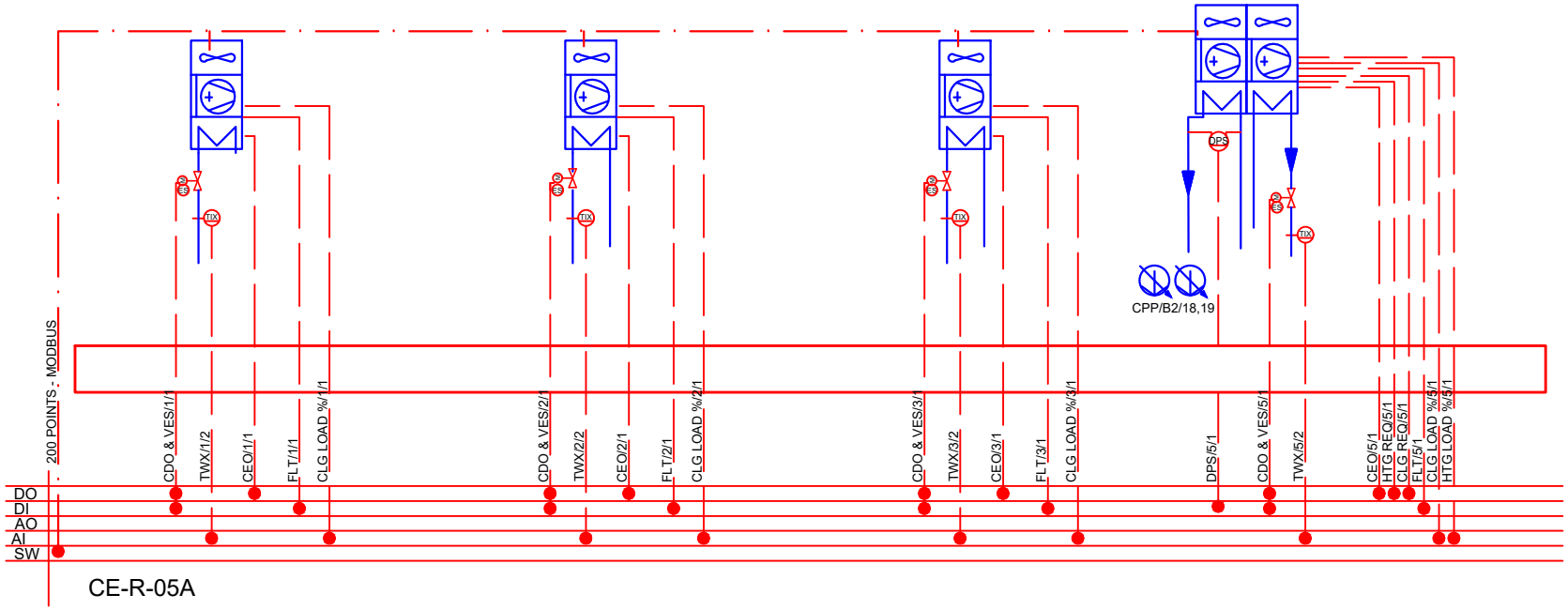

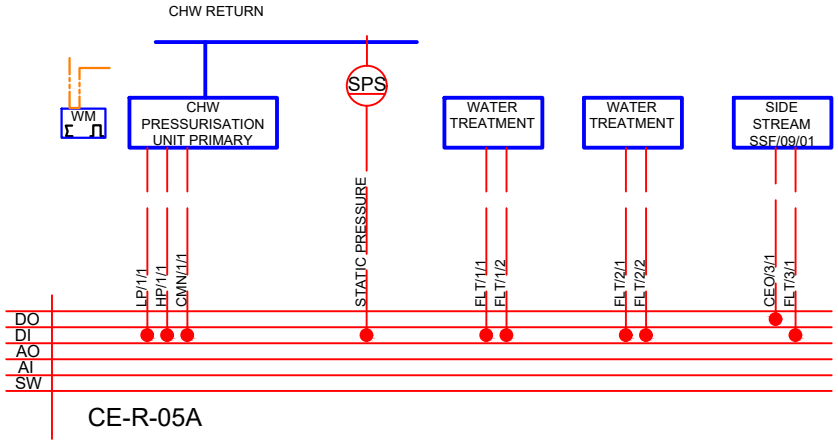

This drawing shall be read in conjunction with all other drawings and the services specification document(s).
All materials and workmanship shall conform with the relevant British & European Standards, Specifications and Codes of Practice.

Rev	Date	Description	By

PRINT IN COLOUR | GENERAL NOTES | Amendments

Client: Fairlawn Controls

Status: STAGE 4

Project: Fairlawn

Drawing Title: AUTOMATIC CONTROLS

COOLING 2

www.fairlawncontrols.com alan@fairlawncontrols.com

Drawn | Engineer: Alan J | Checked | Date origin

Scale @A3: NTS | File/BIM ref | Project

Sheet number: 6020 | Revision: P-02

CPP/09/01, 02, 03, 04

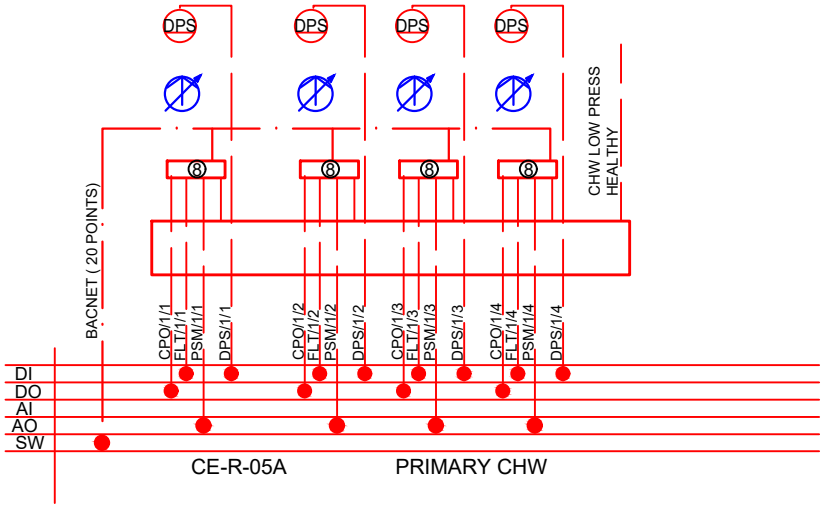

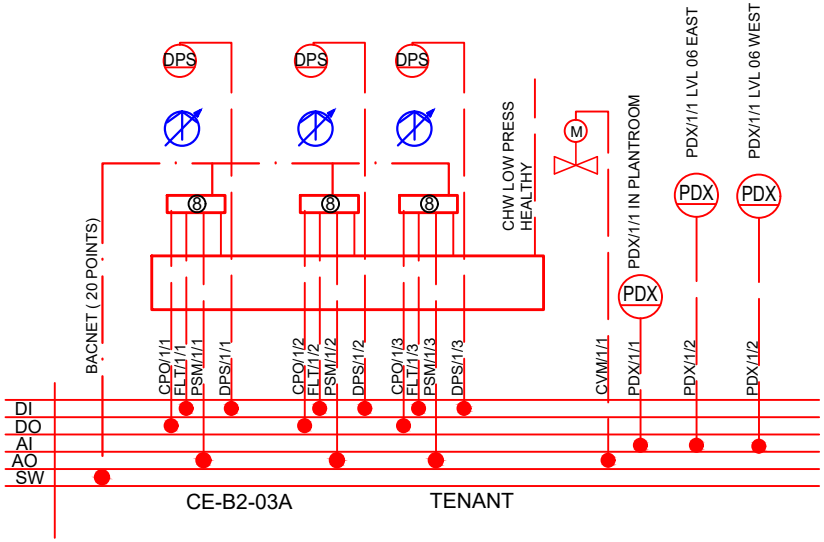

CPP/B2/01, 02, 03

This drawing shall be read in conjunction with all other drawings and the services specification document(s).
All materials and workmanship shall conform with the relevant British & European Standards, Specifications and Codes of Practice.

PRINT IN COLOUR | GENERAL NOTES

Rev	Date	Description	By

Amendments

Client: Fairlawn Controls

Status: STAGE 4

Project: Fairlawn

Drawing Title: AUTOMATIC CONTROLS

COOLING 3

www.fairlawncontrols.com alan@fairlawncontrols.com

Drawn	Engineer	Checked	Date origin
	Alan J		

Scale @A3: NTS | File/BIM ref | Project

Sheet number: 6030 | Revision: P-02

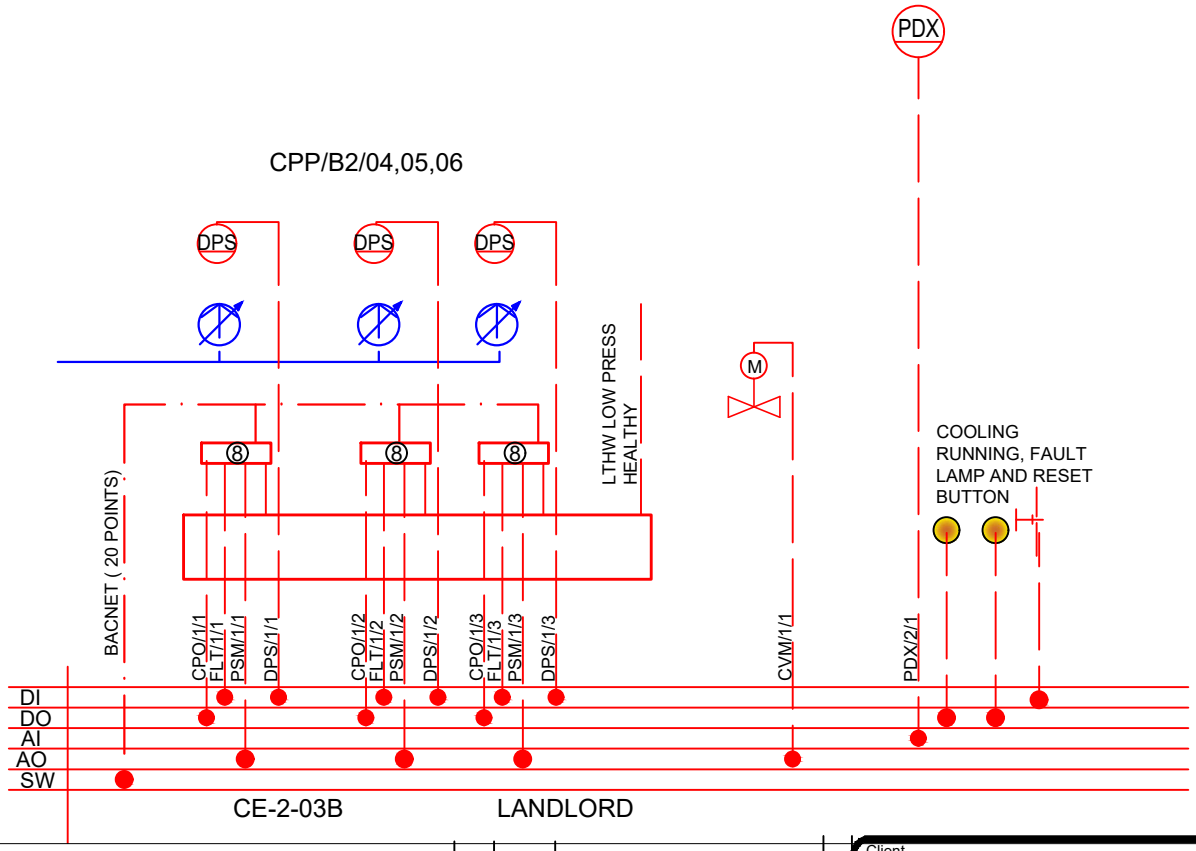

This drawing shall be read in conjunction with all other drawings and the services specification document(s).
All materials and workmanship shall conform with the relevant British & European Standards, Specifications and Codes of Practice.

Rev	Date	Description	By

PRINT IN COLOUR | GENERAL NOTES | Amendments

Client
Fairlawn Controls

Status
STAGE 4

Project
Fairlawn

Drawing Title
AUTOMATIC CONTROLS

COOLING 4

www.fairlawncontrols.com alan@fairlawncontrols.com

Drawn	Engineer	Checked	Date origin
	Alan J		

Scale @A3 NTS | File/BIM ref | Project

Sheet number 6040 | Revision P-02

LANDLORD TENANT OFFICE HEAT INTERFACE UNITS

CE-02-01	CE-02-02	CE-02-03	CE-02-04
CE-03-01	CE-03-02	CE-03-03	CE-03-04
CE-04-01	CE-04-02	CE-04-03	CE-04-04
CE-05-01	CE-05-02	CE-05-03	CE-05-04
CE-06-01	CE-06-02		
CE-07-01	CE-07-02		

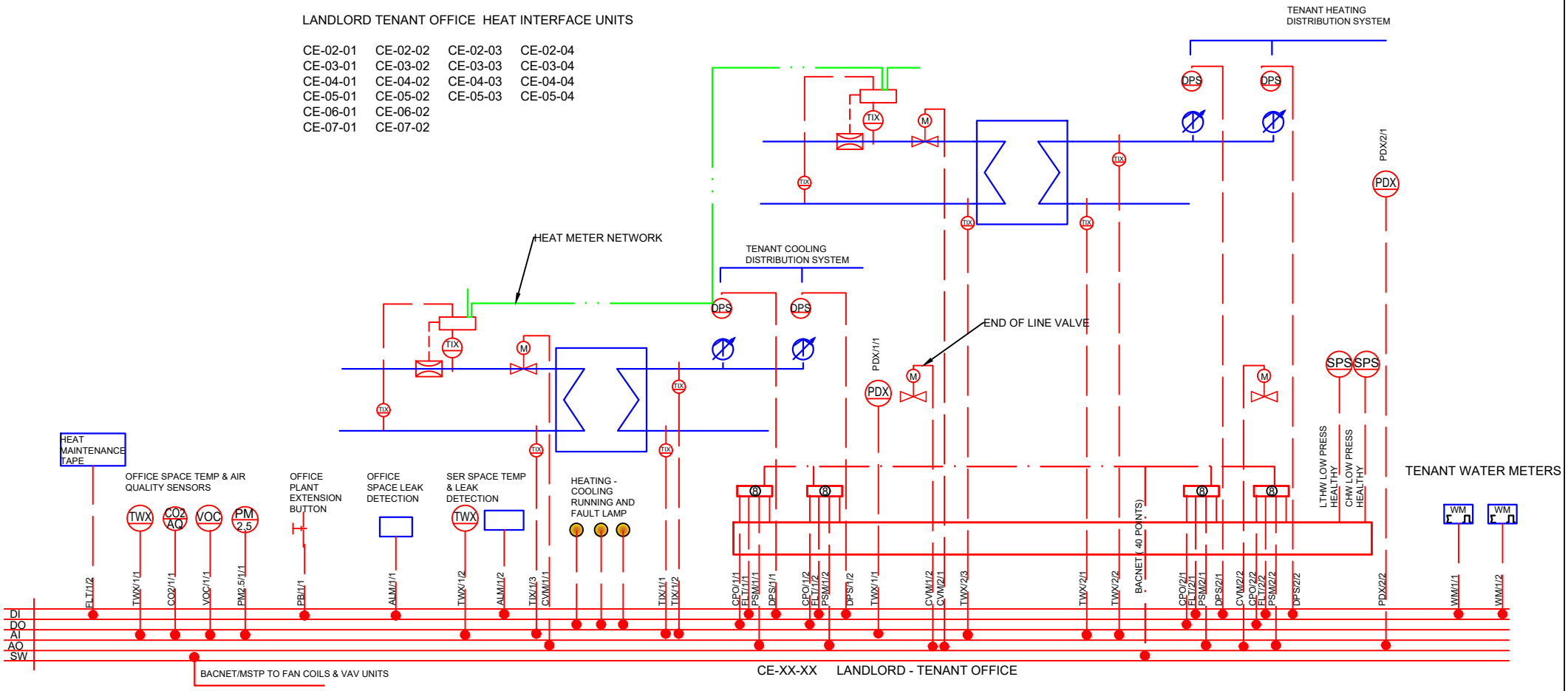

This drawing shall be read in conjunction with all other drawings and the services specification document(s).
All materials and workmanship shall conform with the relevant British & European Standards, Specifications and Codes of Practice.

Rev	Date	Description	By

PRINT IN COLOUR | GENERAL NOTES | Amendments

Client: Fairlawn Controls

Status: STAGE 4

Project: Fairlawn

Drawing Title: AUTOMATIC CONTROLS

CONTROL & MONITORING 1

www.fairlawncontrols.com alan@fairlawncontrols.com

Drawn | Engineer: Alan J | Checked | Date origin

Scale @A3: NTS | File/BIM ref | Project

Sheet number: 7010 | Revision: P-02

LANDLORD TENANT RETAIL HEAT INTERFACE UNITS

CE-B1-02 GYM - NB REQUIRES 2 HEATING AND 1 COOLING PHX
CE-00-05 RETAIL TENANT 4
CE-00-04 RETAIL TENANT 3
CE-00-03 RETAIL TENANT 2
CE-00-02 RETAIL TENANT 1
CE-00-07 RESTAURANT 3
CE-00-06 RESTAURANT 2
CE-08-01 RESTAURANT 1

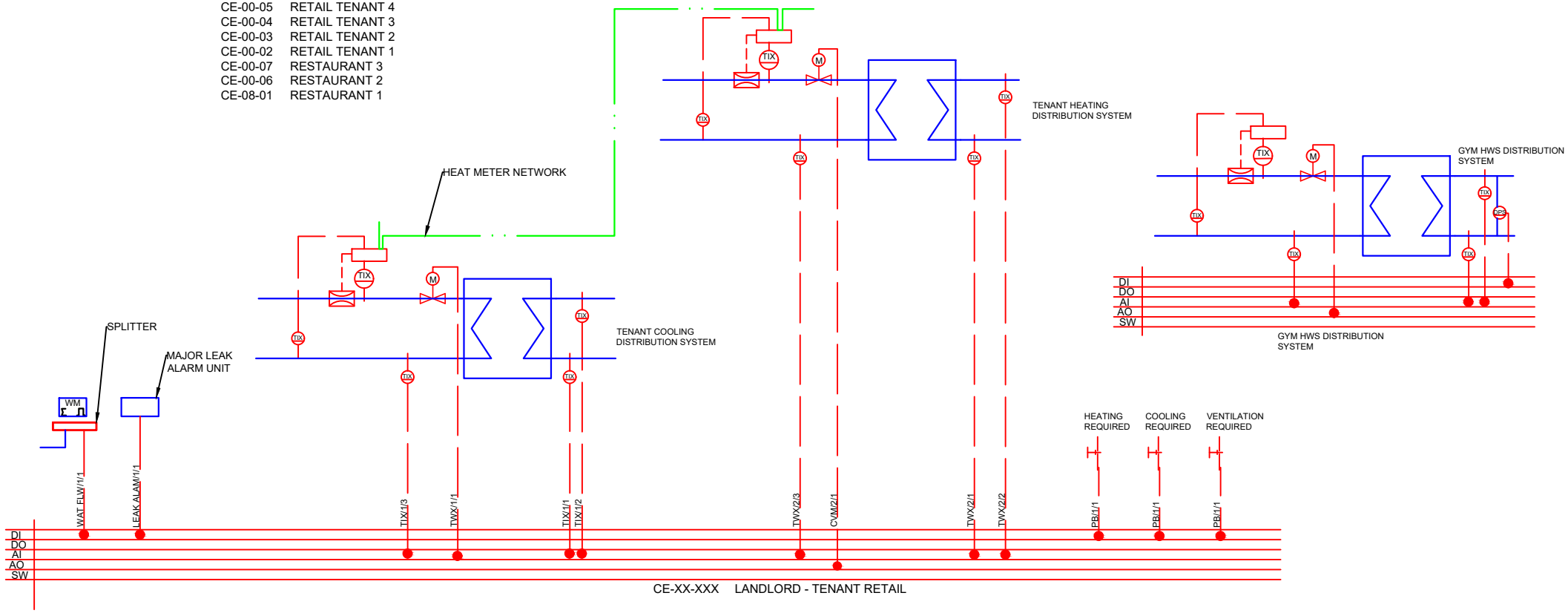

CE-XX-XXX LANDLORD - TENANT RETAIL

This drawing shall be read in conjunction with all other drawings and the services specification document(s).
All materials and workmanship shall conform with the relevant British & European Standards, Specifications and Codes of Practice.

Rev	Date	Description	By

PRINT IN COLOUR | GENERAL NOTES | Amendments

Client: Fairlawn Controls

Status: STAGE 4

Project: Fairlawn

Drawing Title: AUTOMATIC CONTROLS

CONTROL & MONITORING 2

www.fairlawncontrols.com alan@fairlawncontrols.com

Drawn | Engineer: Alan J | Checked | Date origin

Scale @A3: NTS | File/BIM ref | Project

Sheet number: 7020 | Revision: P-02

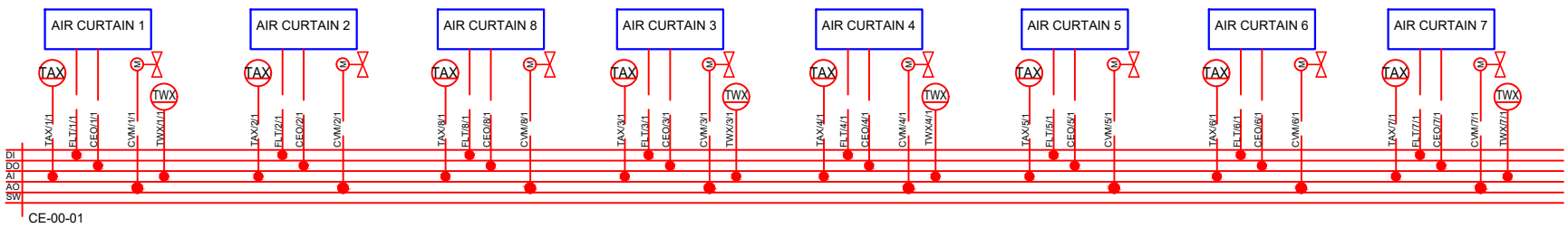

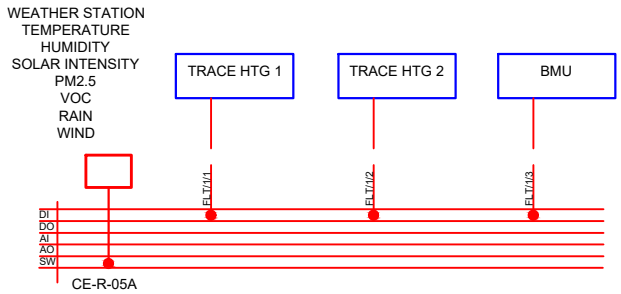

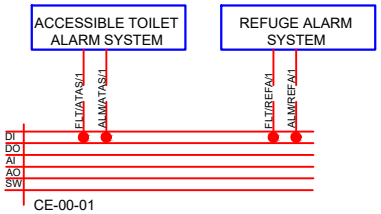

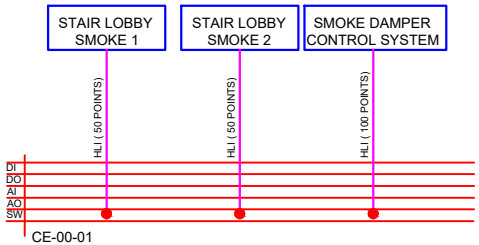

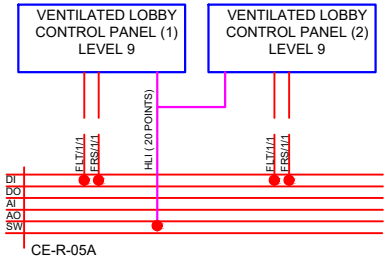

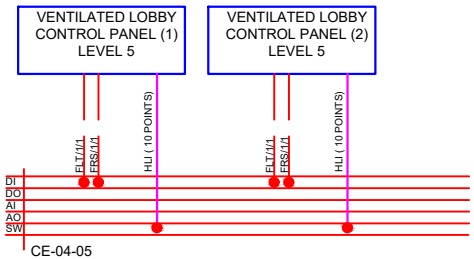

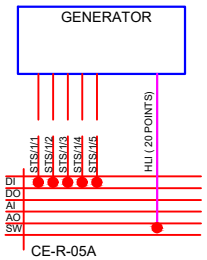

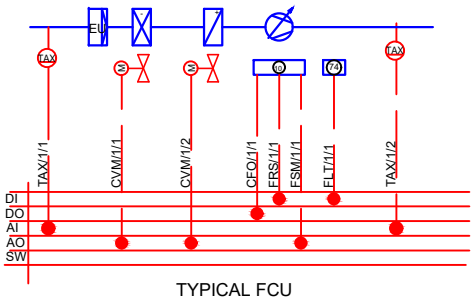

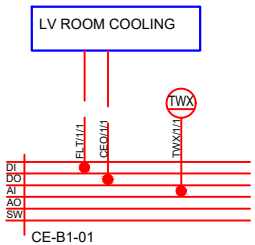

This drawing shall be read in conjunction with all other drawings and the services specification document(s).
All materials and workmanship shall conform with the relevant British & European Standards, Specifications and Codes of Practice.

Rev	Date	Description	By

PRINT IN COLOUR | GENERAL NOTES | Amendments

Client: Fairlawn Controls

Status: STAGE 4

Project: Fairlawn

Drawing Title: AUTOMATIC CONTROLS

CONTROL & MONITORING 3

www.fairlawncontrols.com alan@fairlawncontrols.com

Drawn | Engineer: Alan J | Checked | Date origin

Scale @A3: NTS | File/BIM ref | Project

Sheet number | Revision: 7110 P-02

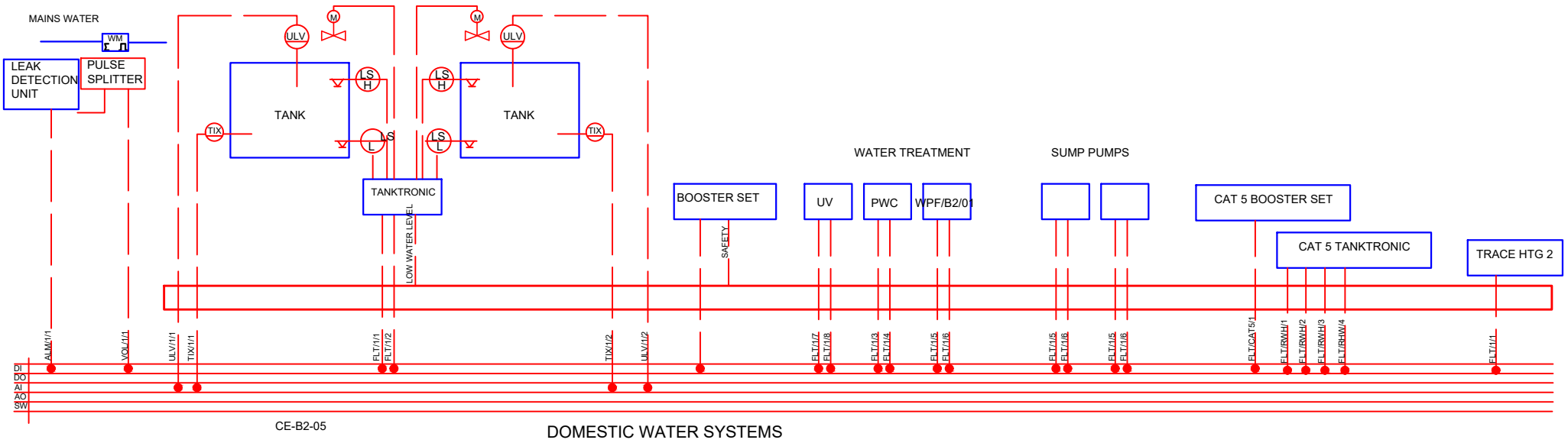

DOMESTIC WATER SYSTEMS

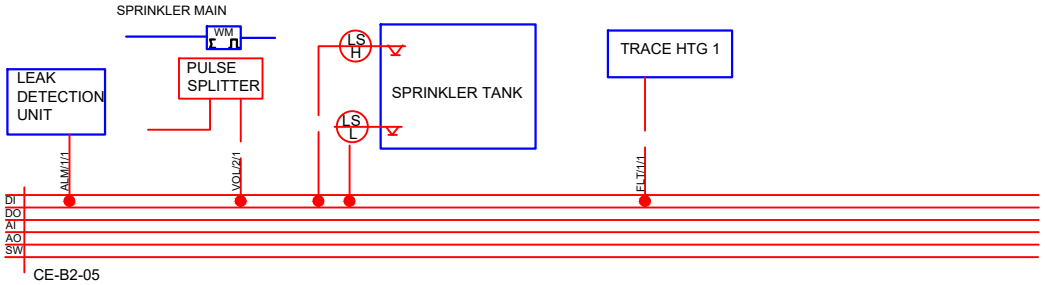

This drawing shall be read in conjunction with all other drawings and the services specification document(s).
All materials and workmanship shall conform with the relevant British & European Standards, Specifications and Codes of Practice.

Rev	Date	Description	By

PRINT IN COLOUR | GENERAL NOTES | Amendments

Client: Fairlawn Controls

Status: STAGE 4

Project: Fairlawn

Drawing Title: AUTOMATIC CONTROLS

PHE CONTROL & MONITORING 1

www.fairlawncontrols.com alan@fairlawncontrols.com

Drawn | Engineer: Alan J | Checked | Date origin

Scale @A3: NTS | File/BIM ref | Project

Sheet number: 7510 | Revision: P-02

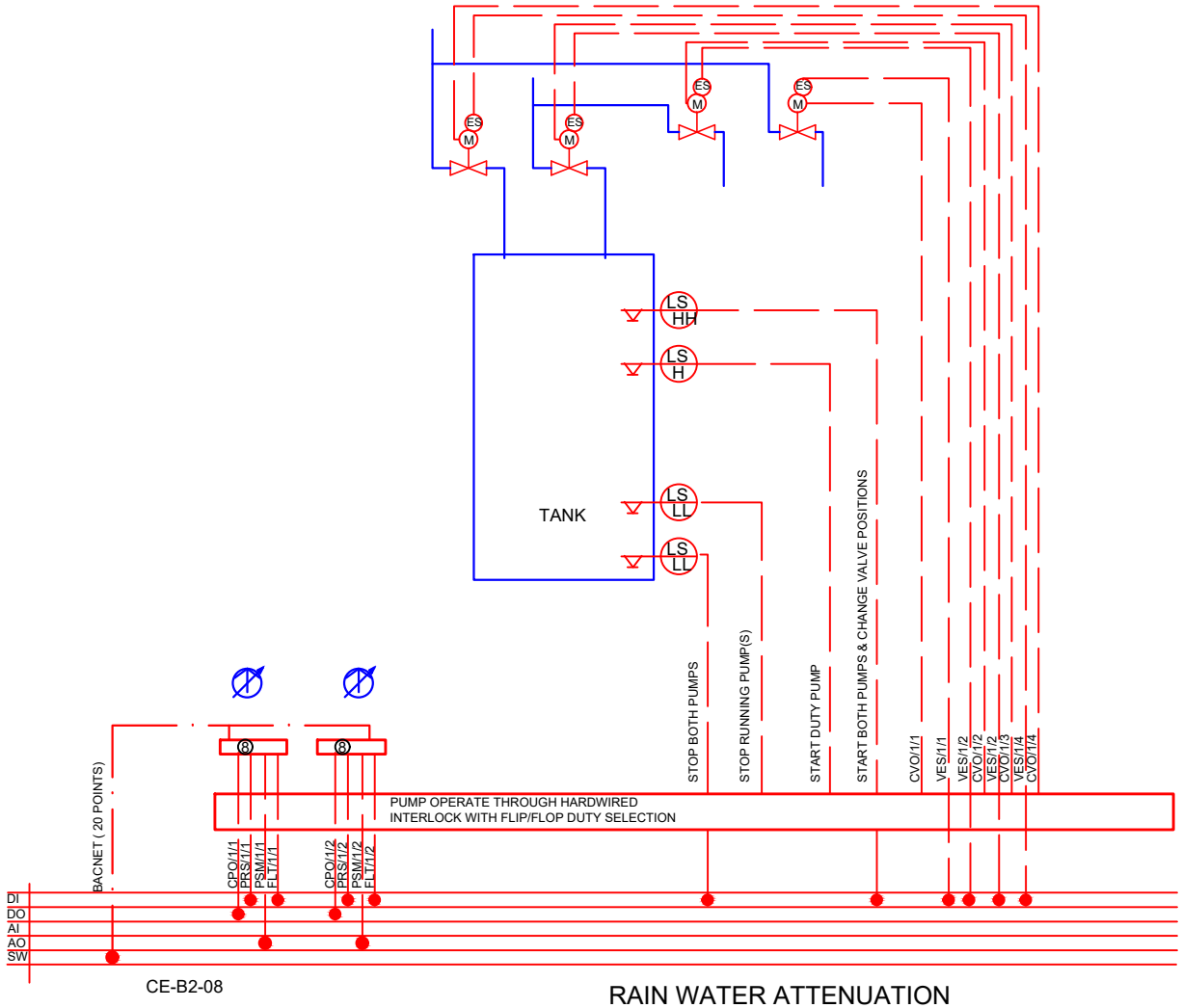

CE-B2-08

RAIN WATER ATTENUATION

This drawing shall be read in conjunction with all other drawings and the services specification document(s).
All materials and workmanship shall conform with the relevant British & European Standards, Specifications and Codes of Practice.

Rev	Date	Description	By

PRINT IN COLOUR | GENERAL NOTES | Amendments

Client: Fairlawn Controls

Status: STAGE 4

Project: Fairlawn

Drawing Title: AUTOMATIC CONTROLS

PHE CONTROL & MONITORING 2

www.fairlawncontrols.com alan@fairlawncontrols.com

Drawn | Engineer: Alan J | Checked | Date origin

Scale @A3: NTS | File/BIM ref | Project

Sheet number: 7515 | Revision: P-02

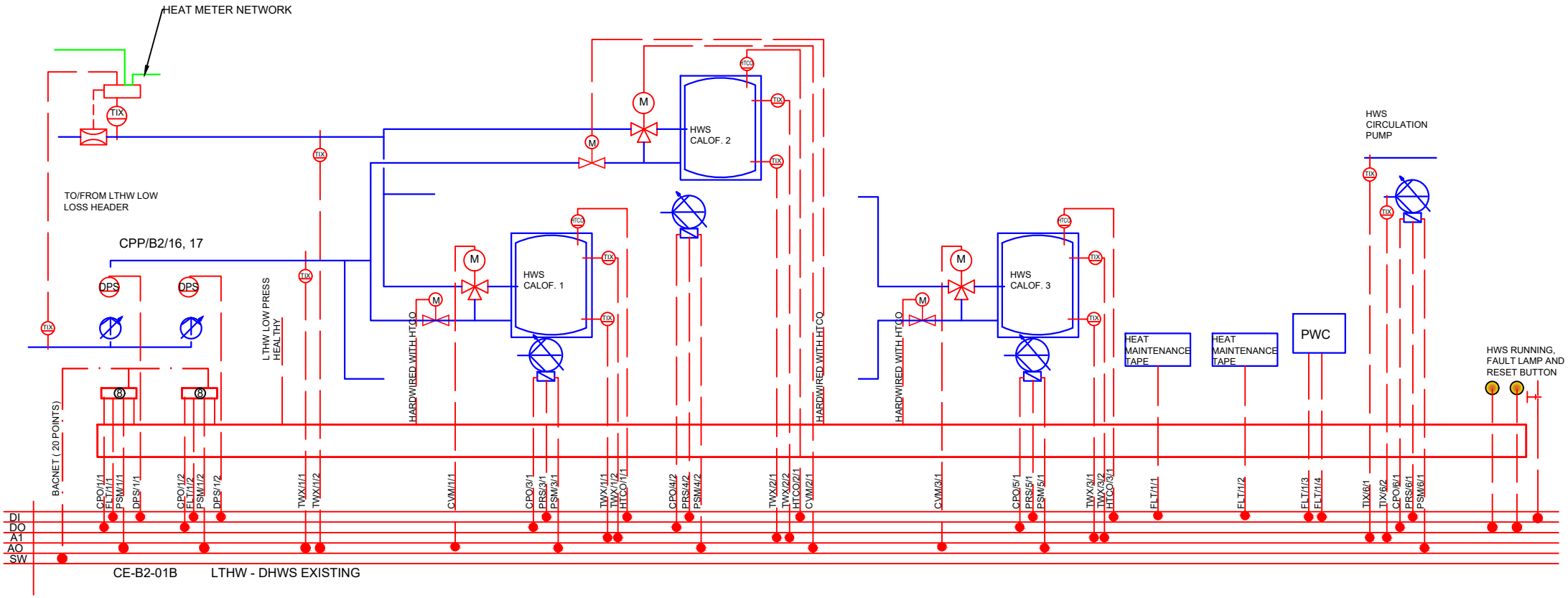

This drawing shall be read in conjunction with all other drawings and the services specification document(s).
All materials and workmanship shall conform with the relevant British & European Standards, Specifications and Codes of Practice.

Rev	Date	Description	By

PRINT IN COLOUR | GENERAL NOTES | Amendments

Client
Fairlawn Controls

Status
STAGE 4

Project
Fairlawn

Drawing Title
AUTOMATIC CONTROLS

PHE - 3
EXISTING DOMESTIC HOT WATER

www.fairlawncontrols.com alan@fairlawncontrols.com

Drawn | Engineer: Alan J | Checked | Date origin

Scale @A3: NTS | File/BIM ref | Project

Sheet number: 7520 | Revision: P-02

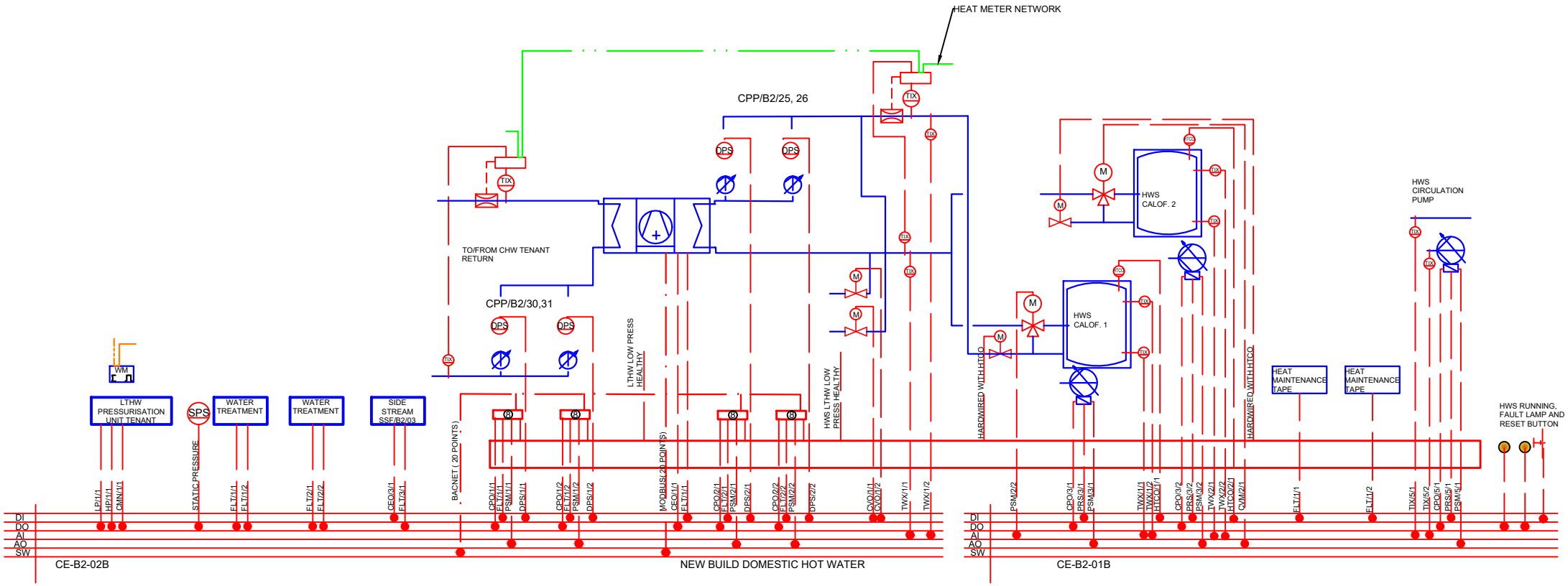

This drawing shall be read in conjunction with all other drawings and the services specification document(s).
All materials and workmanship shall conform with the relevant British & European Standards, Specifications and Codes of Practice.

Rev	Date	Description	By

PRINT IN COLOUR | GENERAL NOTES | Amendments

Client
Fairlawn Controls

Status
STAGE 4

Project
Fairlawn

Drawing Title
AUTOMATIC CONTROLS

PHE 4
NEW BUILD DOMESTIC HOT WATER

www.fairlawncontrols.com alan@fairlawncontrols.com

Drawn	Engineer	Checked	Date origin
	Alan J		

Scale @A3 NTS | File/BIM ref | Project

Sheet number 7530 | Revision P-02

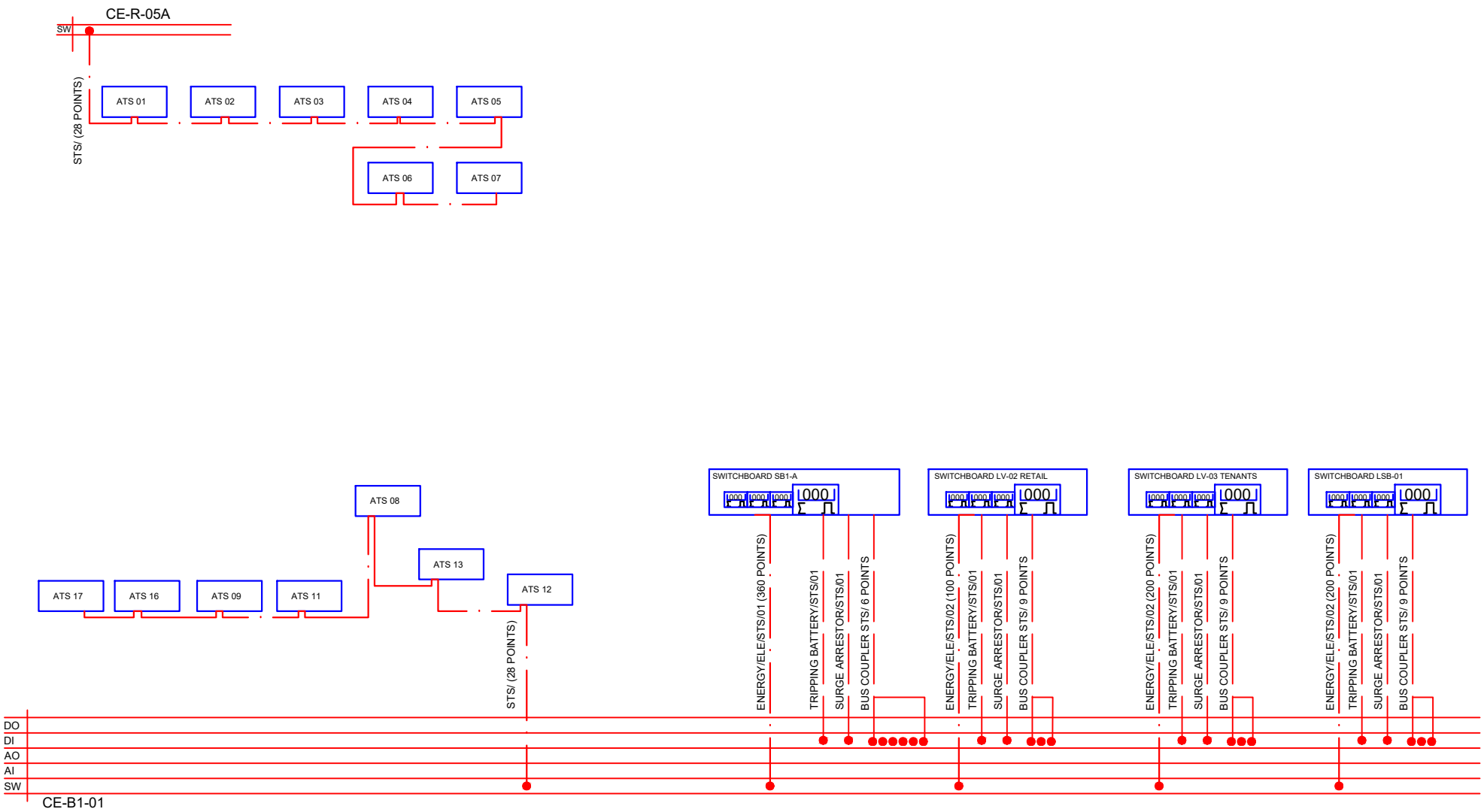

ELECTRICAL METERING BASEMENT

This drawing shall be read in conjunction with all other drawings and the services specification document(s).
All materials and workmanship shall conform with the relevant British & European Standards, Specifications and Codes of Practice.

Rev	Date	Description	By

PRINT IN COLOUR | GENERAL NOTES | Amendments

Client: Fairlawn Controls

Status: STAGE 4

Project: Fairlawn

Drawing Title: AUTOMATIC CONTROLS

ELECTRICAL MONITORING 1

www.fairlawncontrols.com alan@fairlawncontrols.com

Drawn | Engineer: Alan J | Checked | Date origin

Scale @A3: NTS | File/BIM ref | Project

Sheet number | Revision: 8010 P-02

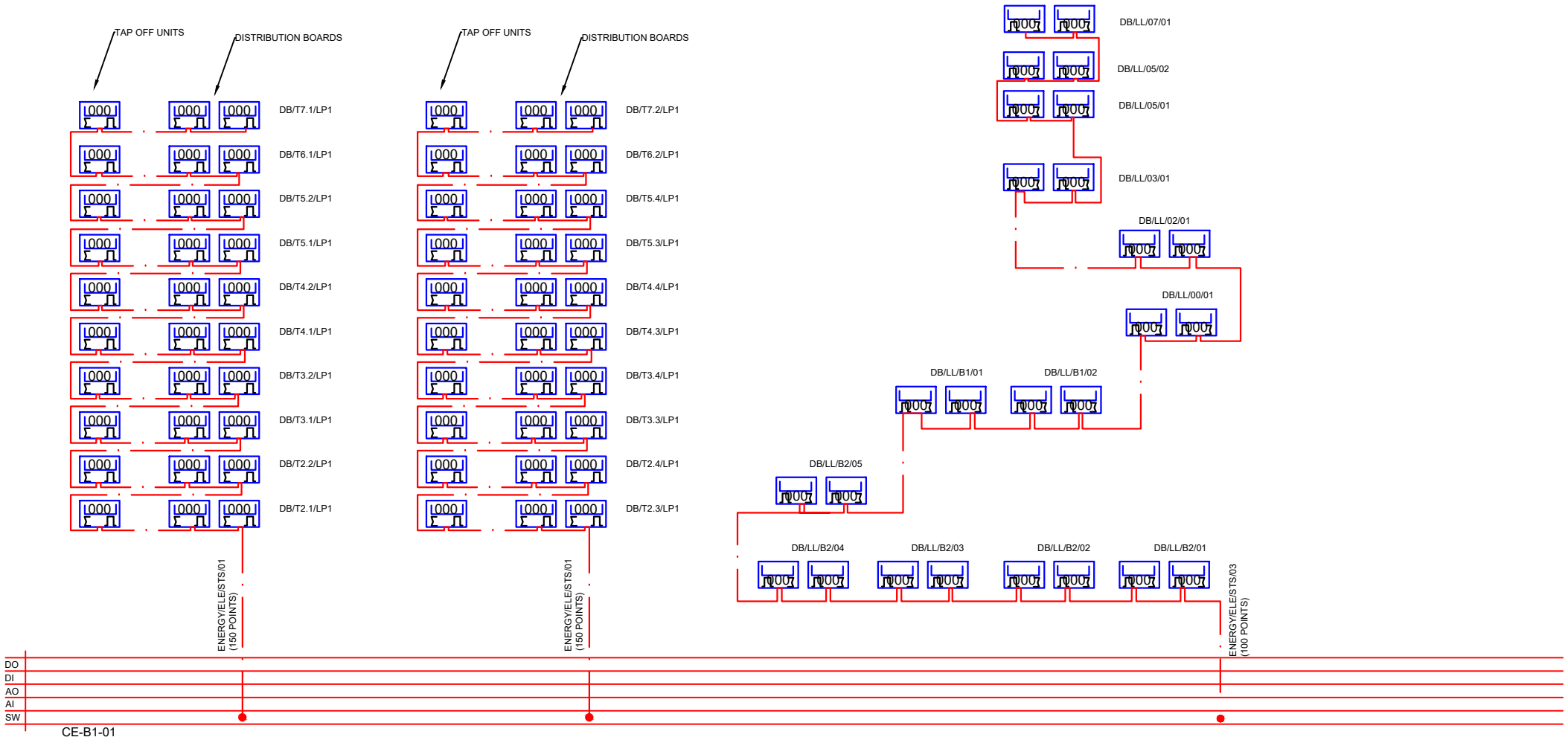

This drawing shall be read in conjunction with all other drawings and the services specification document(s).
All materials and workmanship shall conform with the relevant British & European Standards, Specifications and Codes of Practice.

Rev	Date	Description	By

PRINT IN COLOUR | GENERAL NOTES | Amendments

Client
Fairlawn Controls

Status
STAGE 4

Project
Fairlawn

Drawing Title
AUTOMATIC CONTROLS

ELECTRICAL MONITORING 2

www.fairlawncontrols.com alan@fairlawncontrols.com

Drawn | Engineer: Alan J | Checked | Date origin

Scale @A3: NTS | File/BIM ref | Project

Sheet number: 8020 | Revision: P-02